# IISCO

الشركة الدولية للحلول المتكاملة

INTERNATIONAL INTEGRATED SOLUTIONS Co

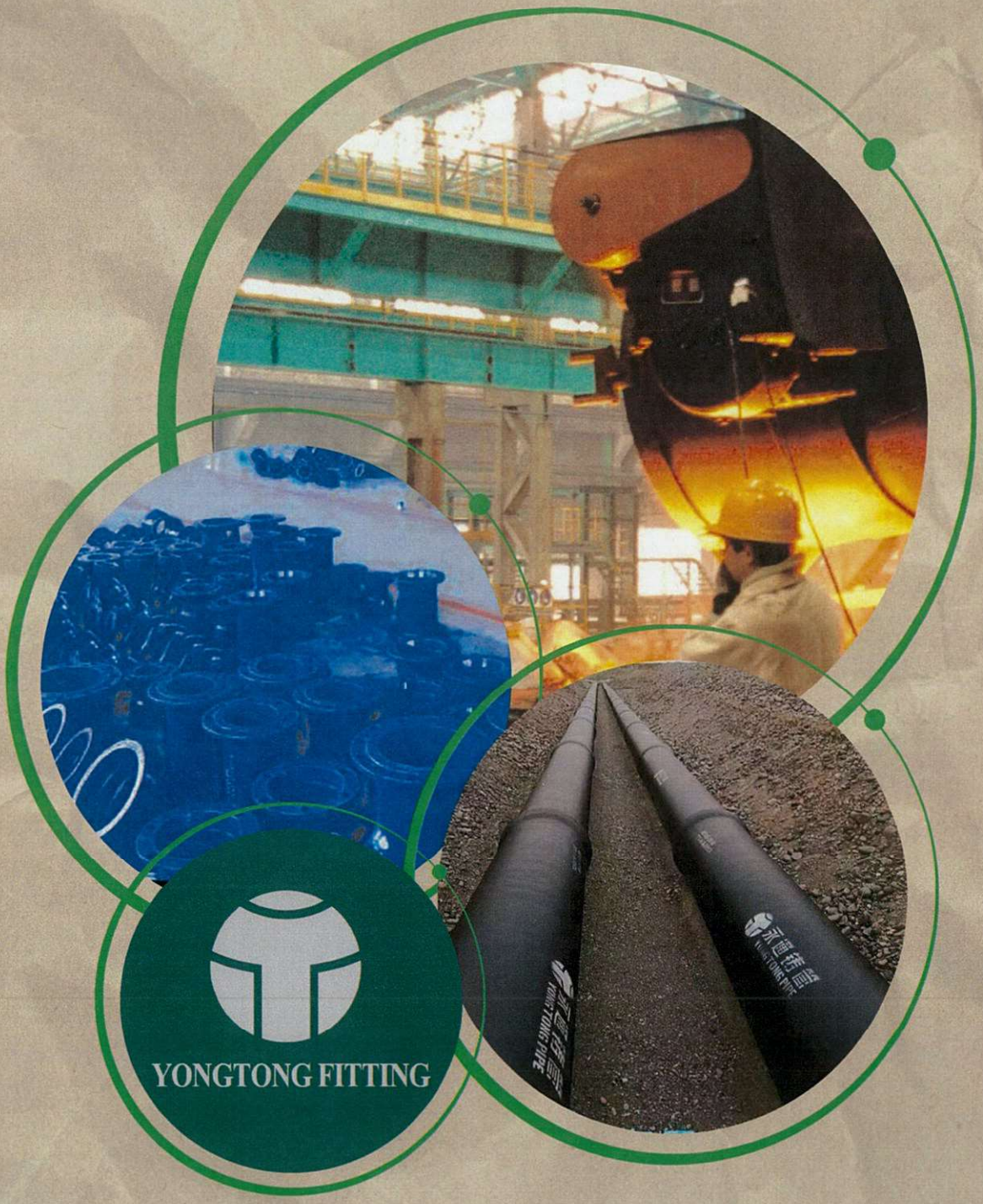

YONGTONG FITTING

IISCO

الشركة الدولية للحلول المتكاملة

INTERNATIONAL INTEGRATED SOLUTIONS Co

بسم الله الرحمن الرحيم

## Contents

## المحتويات



IISCO

الشركة الدولية للحلول المتكاملة

INTERNATIONAL INTEGRATED SOLUTIONS Co

## who are we

**The International Company for Integrated Solutions** was established in 2011. The company specialized in supplying ductile pipes and their accessories. The International Company for Integrated Solutions is the exclusive agent for **(YongTong Ductile Iron Pipes Co. LTD.)** which produces the ductile pipes and their accessories.
**(Yongtong Ductile)** is considered one of the companies of the **(ANGANG)** group, where the **(Anyang)** group founded to produce the Iron & Steel Group in 1958.
**ANGANG** creates an excellent record of continuously making profit for 30 years and becomes one of the super modern steel enterprises in China with annual production exceed 10,000,000 tons.
In 2008, the sales reached more than 50 billion yuan. Now **ANGANG's** business fields include mining, coking, smelting, mechanical machining, metallurgical construction, transport, and trading, it can produce more than 30 kinds of different iron and steel products with specifications including middle thick plate, coil plate, high speed wire rod, Reinforced bar round bar Angel, Channel and Ductile iron pipes.
In recent years **ANGANG** has been granted the honored titles for many times in China.
**ANGANG** is dedicated to sustainable development, to seek harmony between humans and nature.

## من نحن

تأسست **الشركة الدولية للحلول المتكاملة** عام 2011. وهي شركة سعودية متخصصة في توريد أنابيب الدكتايل وملحقاتها وهي الوكيل الحصري لمنتجات شركات **Yongtong Ductile** الشركة التي أنشأت عام 1958 وهي متخصصة في صناعات الصلب وتنتج أنابيب حديد الدكتايل وملحقاتها وبكافة الأقطار من قطر 80 ملم إلى قطر 2600 ملم تعتبر شركة **Yongtong Ductile** هي إحدى شركات مجموعة **ANGANG group** والتي حققت ارباح مستمرة لمدة 30 عام واصبحت احدى أكبر الشركات الحديثة في انتاج الصلب في الصين حيث يبلغ انتاجها 10 مليون طن وفي عام 2008 وصلت المبيعات الى 50 مليار يوان سنويا وتشمل مجالات عمل **ANGANG group** الآن التعدين وفحم الكوك والصهر والتصنيع الميكانيكي والإنشاءات المعدنية، والنقل، والتجارة ويمكنها إنتاج أكثر من 30 نوعًا من منتجات الحديد والصلب المختلفة حتى قطر 2600 مم وبمواصفات عالمية بما في ذلك الألواح السميكة والمتوسطة ولوحات الملفات وقضبان الأسلاك والقضبان المقواة والقضبان المستديرة، والقنوات وأنابيب حديد الدكتايل،في السنوات الأخيرة، حصلت مجموعة **ANGANG group** على أعلى التقييمات في مجالات الجودة والضمان من خلال نظام مراقبة الجودة المعتمد وفق أعلى المعايير العالمية مكرسة التنمية المستدامة كشعار أعلى وذلك لتحقيق الانسجام بين الإنسان والطبيعة

IISCO
الشركة الدولية للحلول المتكاملة
INTERNATIONAL INTEGRATED SOLUTIONS Co

## ANGANG Group Yongtong Ductile Cast Iron Pipe Co., Ltd.

One of the subsidiary companies of the large Chinese state-ownedenterprise **(ANGANG Iron &SteelGroup Co., Ltd)** and has beenestablished since 1958 as amodern factory with a high start, high level and high quality and considered one of the world's largest companies in the production of ductile pipes and accessories.

YongTong owns production lines of the highest standards with aproduction capacity of up to1,200,000 tons per year of ductile iron and produces diameters from 80 mm to 2600 mm with several types of interior and exterior coatings, including cement. Zinc, bitumen,epoxy, PE ceramic epoxy. Polyurethane FBE etc., which are widely used for water supply and sewage drainage.

**YongTong** pipe pig iron is produced by the same company and has the features of low P. low S.low Ti and so on.This type of iron ore is widely used in drinking water supply and sewage water.

The production process is rigorously tested in accordance with global and international standards, our management system has been evaluated and certified by SGS as meeting the requirements of ISO9001,**YongTong pipes** are certified by SGS to meet the requirements of ISO2531, EN545 and EN598. The inner pipe lining complies with ISO4179, and the outer coating complies with ISO8179. The ISO7186 BS6920 and other certificates have been obtained also.

Through tireless efforts, we have developed self-lifting pipes with no-drilling characteristics. **YongTong** pipes have been exported to countries and regions in the Middle East and Europe. Central and South America,South east Asia, and Africa.

There are a lot of qualified managers and technicians and a well-trained team for after-sales service to provides all manufacturing, packaging, transportation, technical support and installation services.Employees will face the future, devote themselves to develop the pipeline system and benefit humanity.

## ANGANG Group Yongtong Ductile Cast Iron Pipe Co., Ltd.

هي إحدى شركات التابعة للمؤسسة الكبيرة المملوك للدولة الصينية **(ANGANG Iron &Steel Group Co., Ltd)** وقد أنشأت منذ عام 1958 وأصبحت من أفضل المصنعين من خلال المعدات الحديثة ومستوى الجودة المرتفع وتعتبر من أكبر شركات العالم لإنتاج أنابيب الدكتايل وملحقاتها

تمتلك مصانع **Yongtong** خطوط انتاج من اعلى المستويات وبقدرة إنتاجية تصل الى 1,200,000 طن سنوياً من حديد الدكتايل وتنتج كافة الأقطار من 80 ملم حتى 2600 مم وبكافة أنواع الطلاء الداخلي والخارجي، بما في ذلك الأسمنت. الزنك البيتومين، الايبوكسي، الايبوكسي السيراميك PE البوليوريثين و FBEوالتي تستخدم في نطاق واسع لتزويد المياه وتصريف الصرف الصحي

تخضع عملية الإنتاج الى اختبارات بدقة عالية وفقا للمعايير العالمية والدولية، لقد تم تقييم نظامالإدارة الخاص بنا واعتماده من قبل SGS باعتباره يفي بمتطلبات ISO9001 وقد تم اعتماد أنابيب **Yongtong** من قبل SGS حسب متطلبات المواصفات العالمية EN598, EN545, ISO2531 وتتوافق بطانة الأنابيب الداخلية مع المواصفات العالمية ISO4179 وقد حصل المصنع ايضا على شهادات ISO7186 BS6920 وغيرها من الشهادات العالمية

من خلال الجهود التي لا تعرف الكلل، قامت الشركة بتطوير أنابيب الرفع ذاتيًا بخصائص عدم الحفر، وتم تصدير أنابيب **Yongtong** إلى دول ومناطق في الشرق الأوسط وأوروبا أمريكا الوسطى والجنوبية جنوب و شرق آسيا وأفريقيا وما إلى ذلك

هناك الكثير من المديرين والفنيين المؤهلين وفريق مدرب جيدًا لخدمة ما بعد البيع وتقدم كافة هذه الفرق جميع خدمات التصنيع والتغليف والنقل والتركيب وخدمات الدعم الفني، ويستشرف موظفو الشركة المستقبل، ويكرسون أنفسهم لتطوير أنظمة خطوط الأنابيب وإفادة البشرية

IISCO
الشركة الدولية للحلول المتكاملة
INTERNATIONAL INTEGRATED SOLUTIONS Co

# EXPERRIENCE

**Brief About some companies, projects implemented during the last 3 years :**

- **Danaikhan Stroytech LLP : Project TURKESTAN WATER SUPPLY PROJECT – Kazakhstan.**
- **MISSAN OIL FIELD-WATER PIPELINE PROJECT FROM MUSHARRAH TO BUZURGAN – IRAQ.**
- **TURKESTAN WATER SUPPLY PROJECT2- Kazakhstan**
- **WSC 2201/20-LA 228c/20-PD4500004834-MALTA**
- **NWSDB WATER - SRI LANKA**
- **construction of engineering networks supplied to new terminal of airport of the city of Shymkent – Kazakhstan**
- **EMPRESAS DE SERVICIOS PUBLICOS DE CAJICA SA ESP – COLOMBIA**
- **MYRTOS PROJECT – Greece**
- **UNION TEMPORAL ACUEDUCTO VILLAPATIOS – COLOMBIA**
- **TAY27/2022 TERSEFANOU-LARNACA – CYPRUS**
- **KALAMATA Project – Greece**
- **INTERHYDRO SAS – SENEGAL**
- **KEWAKOTO – ETHIPOPIA.**
- **DUHUB INDUSTRIES (M) SDN BHD – MALAYSIA**
- **HONGKONG GENERAL WATER**
- **INTERNATIONAL LIMITED – PANAMA.**
- **STAR SIN TRADING PTE LTD – SINGAPORE**
- **SARL FILS BENSAADA TAYEB – ALGERIA**
- **CHINA CIVIL ENGINEERING CONSTRUCTIONCORPORATION - Benin**
- **CHINA GEO-ENGINEERING CORPORATION - Cote d'lvoire**
- **CHINA RAILWAY SEVENTH GROUP CO.,LTD. ETHIPOPIA**
- **ELECTROSTEEL SALES CO., LTD.- MIDDLE EAST.**
- **DALIAN TANCO INDUSTRY COMPANY – UAE.**
- **HENAN WEIN INDUSTRY COMPANY- UAE.**

IISCO

الشركة الدولية للحلول المتكاملة

INTERNATIONAL INTEGRATED SOLUTIONS Co

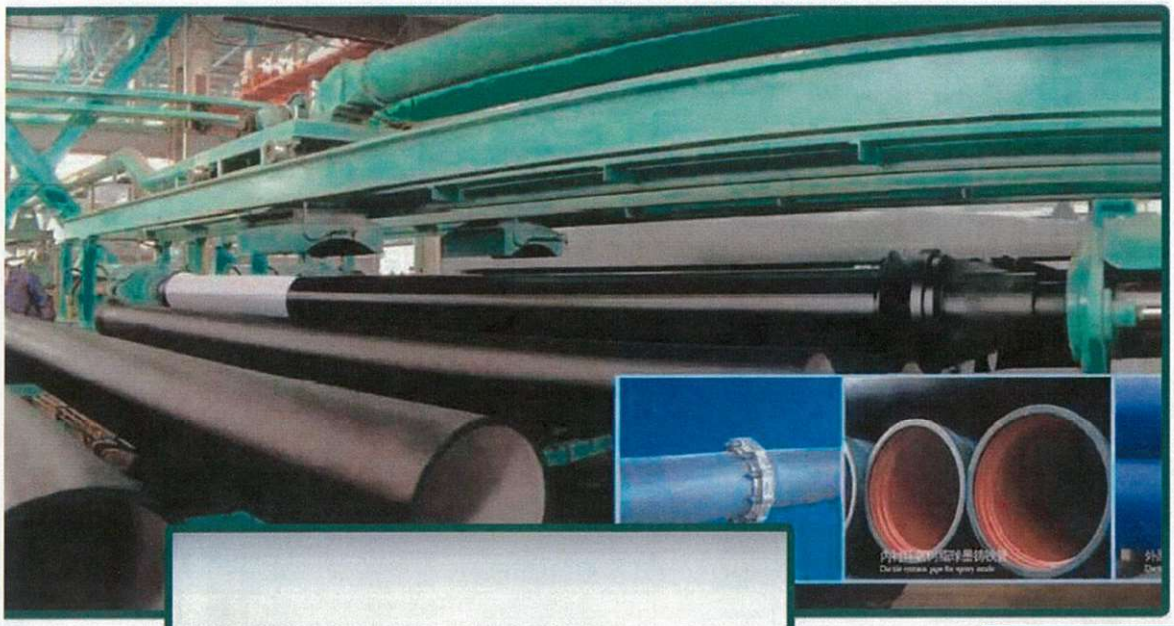

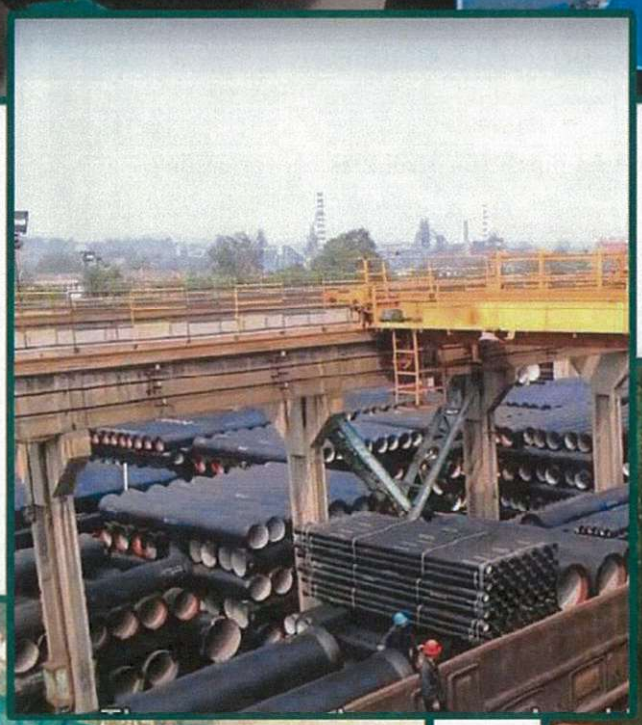

# Factory certificates

IISCO

الشركة الدولية للحلول المتكاملة

INTERNATIONAL INTEGRATED SOLUTIONS Co

# QUALITY MANAGEMENT SYSTEM CERTIFICATE

Audit and Confirm by Beijing Grand Honour Certification Co., Ltd.

## Angang Group Yongtong Ductile Cast Iron Pipe Co., Ltd.

Unified social credit code：91410522744051070X

Has established and implement a quality system in conformity with

## GB/T 19001-2016/ISO 9001:2015 standard.

The scope covered by this management system:

Products and activities:

Production and sales of centrifugal ductile iron pipes, (for steel making, for casting, and for ductile iron).

Physical locations:

West section of Yongtong Avenue, Shuiye Town, Anyang County, Anyang City, Henan Province.

Note: The products covered in this scope shall be conformed to the requirement of associated licenced document or qualified certificate.

Certificate registration:02221Q3069R0L Issuing date:Aug.3, 2021 Effective date:From Aug.3, 2021 to Aug.2, 2024

The certified organization should accept the annual surveillance audit on schedule.This certificate shall be used in conjunction with annually surveillance audit stamp issued by GHC.

First surveillance before Aug.2, 2022

(Authorized Representative)

中国认可
国际互认
管理体系
MANAGEMENT SYSTEM
CNAS C022-M

GHC Add: Fuhai Center, Building No. 3, Room 307, Daliushu Road, Haidian District, Beijing, China.

The validity of this certificate can be verified from the following website www.cnca.gov.cn & www.cmiqc.com

ISO9001

SPECIFICATIONS APPLICATION CERTIFICATE 545

SGS

# PRODUCT CERTIFICATE

产品认证证书

**Certificate No** 证书编号: **C/IN-TJ-5805-MES-23081-02-1ST**

Manufacturer 制造商:

ANGANG GROUP YONGTONG DUCTILE CAST IRON PIPE CO., LTD.,

安钢集团永通球墨铸铁管有限责任公司

WEST PART OF NORTH RING ROAD, SHUIYE TOWN, ANYANG COUNTY, HENAN PROVINCE, P.R. CHINA

安阳县水冶镇永通大道西段

Product name 产品名称:

Ductile Iron Pipes-Zn-Al alloy coating 球墨铸铁管-锌铝合金

Product series, specification, type 产品系列、规格、型号:

DN80-DN1200

Applicable standards 产品标准:

EN 545:2010

Certification module 认证模式

**Site Inspection, Continuous surveillance 现场检查、获证后监督**

This certificate attests above mentioned products are complied with the certification scheme:

本证书证明上述产品满足认证方案的要求，认证方案编号:

PC-IND-SP-002

This certificate is valid from **Jun 28, 2023 until Jun 27, 2026** and remains valid subject to satisfactory periodical surveillance audited by SGS.

本证书有效期为**2023年6月28日至2026年6月27日**

有效期内的有效性依据SGS的定期监督获得保持。

Initial issued on 初次取证日期: **Jun.28, 2023** (2023年6月28日)

Current issued on本次签发日期: **Jun.28, 2023** (2023年6月28日)

The certificate has 3ORIGINALS, this is the 1st ORIGINAL.

本证书共有3份正本，这是第1份正本。

The authorized representative授权签字:

SGS-CSTC Standards Technical Services Co., Ltd.
16/F, Century Yuhui Mansion, No.73, Fucheng Road, Beijing, China, 100142
t +86 (0) 10 5315 0227 f +86 (0) 10 6845 7979 www.sgsonline.com.cn

Periodical surveillance shall be held to verify that the Manufacturer duly fulfils the obligations arising out of the quality system. Amendment of the quality system shall be informed to SGS for assessment.

须通过定期监督以验证制造商充分的履行了质量体系中规定的责任。

任何关于质量体系的修订须告知 SGS 并评估。

Periodical surveillance record定期监督记录:

| Authorized representative: 授权签字 | Authorized representative: 授权签字 | Authorized representative: 授权签字 |
|---|---|---|
| Frank Fan | | |
| STAMP 钢印 | STAMP钢印 | STAMP钢印 |
| 1st surveillance period 第 1 个监督周期: 6.28, 2023-6.27, 2024 | 2nd surveillance period 第 2 个监督周期: 6.28, 2024-6.27, 2025 | 3rd surveillance period 第 3 个监督周期: 6.28, 2025-6.27, 2026 |





IISCO
الشركة الدولية للحلول المتكاملة
INTERNATIONAL INTEGRATED SOLUTIONS Co

SPECIFICATIONS APPLICATION CERTIFICATE 598

SGS

# PRODUCT CERTIFICATE

产品认证证书

**Certificate No** 证书编号: **C/IN-TJ-5805-MES-23081-01-1ST**

Manufacturer 制造商:

ANGANG GROUP YONGTONG DUCTILE CAST IRON PIPE CO., LTD..

安钢集团永通球墨铸铁管有限责任公司

WEST PART OF NORTH RING ROAD, SHUIYE TOWN, ANYANG COUNTY, HENAN PROVINCE, P.R. CHINA

安阳县水冶镇水通大道西段

Product name 产品名称:

Ductile Iron Pipes-Zn-Al alloy coating 球墨铸铁管-锌铝合金

Product series, specification, type 产品系列、规格、型号:

DN80-DN1200

Applicable standards 产品标准:

EN 598:2007/A1-2009

Certification module 认证模式

**Site Inspection, Continuous surveillance 现场检查、获证后监督**

This certificate attests above mentioned products are complied with the certification scheme:

本证书证明上述产品满足认证方案的要求，认证方案编号:

PC-IND-SP-001

This certificate is valid from **Jun 28, 2023** until **Jun 27, 2026** and remains valid subject to satisfactory periodical surveillance audited by SGS.

本证书有效期为**2023年6月28日至2026年6月27日**

有效期内的有效性依据SGS的定期监督获得保持。

Initial issued on 初次取证日期: **Jun.28, 2023** (2023年6月28日)

Current issued on本次签发日期: **Jun.28, 2023** (2023年6月28日)

The certificate has 3ORIGINALS, this is the 1st ORIGINAL.

本证书共有3份正本，这是第1份正本。

The authorized representative授权签字:

SGS-CSTC Standards Technical Services Co., Ltd.
16/F, Century Yuhui Mansion, No.73, Fucheng Road, Beijing, China, 100142
t +86 (0) 10 5315 0227 f +86 (0) 10 6845 7979 www.sgsonline.com.cn

Periodical surveillance shall be held to verify that the Manufacturer duly fulfils the obligations arising out of the quality system. Amendment of the quality system shall be informed to SGS for assessment.

须通过定期监督以验证制造商充分的履行了质量体系中规定的责任。

任何关于质量体系的修订须告知 SGS 并评估。

Periodical surveillance record定期监督记录

| Authorized representative: 授权签字 | Authorized representative: 授权签字 | Authorized representative: 授权签字 |
|---|---|---|
| STAMP 钢印 | STAMP钢印 | STAMP钢印 |
| 1st surveillance period 第 1 个监督周期: 6.28, 2023-6.27, 2024 | 2nd surveillance period 第 2 个监督周期: 6.28, 2024-6.27, 2025 | 3rd surveillance period 第 3 个监督周期: 6.28, 2025-6.27, 2026 |





IISCO
الشركة الدولية للحلول المتكاملة
INTERNATIONAL INTEGRATED SOLUTIONS Co

SPECIFICATIONS APPLICATION CERTIFICATE 2531&4179&8179

SGS

# PRODUCT CERTIFICATE

产品认证证书

**Certificate No** 证书编号: **C/IN-TJ- 5805-MES-23081-03-1ST**

Manufacturer 制造商:

ANGANG GROUP YONGTONG DUCTILE CAST IRON PIPE CO., LTD..

安钢集团永通球墨铸铁管有限责任公司

WEST PART OF NORTH RING ROAD, SHUIYE TOWN, ANYANG COUNTY, HENAN PROVINCE, P.R. CHINA

安阳县水冶镇永通大道西段

Product name 产品名称:

Ductile Iron Pipes-Zn-Al alloy coating 球墨铸铁管-锌铝合金

Product series, specification, type 产品系列、规格、型号:

DN80-DN1200

Applicable standards 产品标准:

ISO 2531:2009/Cor.1:2010; ISO 4179:2005, ISO 8179-1:2017

Certification module 认证模式

**Site Inspection, Continuous surveillance 现场检查、获证后监督**

This certificate attests above mentioned products are complied with the certification scheme:

本证书证明上述产品满足认证方案的要求，认证方案编号:

PC-IND-SP-003

This certificate is valid from **Jun 28, 2023** until **Jun 27, 2026** and remains valid subject to satisfactory periodical surveillance audited by SGS.

本证书有效期为**2023年6月28日至2026年6月27日**

有效期内的有效性依据SGS的定期监督获得保持。

Initial issued on 初次取证日期: **Jun.28, 2023** (2023年6月28日)

Current issued on本次签发日期: **Jun.28, 2023** (2023年6月28日)

The certificate has 3ORIGINAL3, this is the 1st ORIGINAL.

本证书共有3份正本，这是第1份正本。

The authorized representative授权签字:

SGS-CSTC Standards Technical Services Co., Ltd.
16/F, Century Yuhui Mansion, No.73, Fucheng Road, Beijing, China, 100142
t +86 (0) 10 5315 0227 f +86 (0) 10 6845 7979 www.sgsonline.com.cn

Periodical surveillance shall be held to verify that the Manufacturer duly fulfils the obligations arising out of the quality system. Amendment of the quality system shall be informed to SGS for assessment.

须通过定期监督以验证制造商充分的履行了质量体系中规定的责任。

任何关于质量体系的修订须告知 SGS 并评估。

Periodical surveillance record,定期监督记录

| Authorized representative: 授权签字 | Authorized representative: 授权签字 | Authorized representative: 授权签字 |
|---|---|---|
| Frank Ren | | |
| STAMP 钢印 | STAMP钢印 | STAMP钢印 |
| 1st surveillance period 第 1 个监督周期: 6.28, 2023-6.27, 2024 | 2nd surveillance period 第 2 个监督周期: 6.28, 2024-6.27, 2025 | 3rd surveillance period 第 3 个监督周期: 6.28, 2025-6.27, 2026 |

SPECIFICATIONS APPLICATION CERTIFICATE 7186

SGS

# PRODUCT CERTIFICATE

产品认证证书

**Certificate No** 证书编号: **C/IN-TJ- 5805-MES-23081-04-1ST**

Manufacturer 制造商:

ANGANG GROUP YONGTONG DUCTILE CAST IRON PIPE CO., LTD.,

安钢集团永通球墨铸铁管有限责任公司

WEST PART OF NORTH RING ROAD, SHUIYE TOWN, ANYANG COUNTY, HENAN PROVINCE, P.R. CHINA

安阳县水冶镇永通大道西段

Product name 产品名称:

Ductile Iron Pipes-Zn-Al alloy coating 球墨铸铁管-锌铝合金

Product series, specification, type 产品系列、规格、型号:

DN80-DN1200

Applicable standards 产品标准:

ISO7186: 2011

Certification module 认证模式

**Site Inspection, Continuous surveillance 现场检查、获证后监督**

This certificate attests above mentioned products are complied with the certification scheme:

本证书证明上述产品满足认证方案的要求，认证方案编号:

PC-IND-SP-004

This certificate is valid from **Jun 28, 2023 until Jun 27, 2026** and remains valid subject to satisfactory periodical surveillance audited by SGS.

本证书有效期为**2023年6月28日至2026年6月27日**

有效期内的有效性依据SGS的定期监督获得保持。

Initial issued on 初次取证日期: **Jun.28, 2023** (2023年6月28日)

Current issued on 本次签发日期: **Jun.28, 2023** (2023年6月28日)

The certificate has 3ORIGINALS, this is the 1st ORIGINAL.

本证书共有3份正本，这是第1份正本。

The authorized representative授权签字:

SGS-CSTC Standards Technical Services Co., Ltd.
16/F, Century Yuhui Mansion, No.73, Fucheng Road, Beijing, China, 100142
t +86 (0) 10 5315 0227 f +86 (0) 10 6845 7979 www.sgsonline.com.cn

Periodical surveillance shall be held to verify that the Manufacturer duly fulfils the obligations arising out of the quality system. Amendment of the quality system shall be informed to SGS for assessment.

须通过定期监督以验证制造商充分的履行了质量体系中规定的责任。

任何关于质量体系的修订须告知 SGS 并评估。

Periodical surveillance record,定期监督记录

| Authorized representative: 授权签字 | Authorized representative: 授权签字 | Authorized representative: 授权签字 |
|---|---|---|
| Frank Ren | | |
| STAMP 钢印 | STAMP钢印 | STAMP钢印 |
| 1st surveillance period 第 1 个监督周期: 6.28, 2023-6.27, 2024 | 2nd surveillance period 第 2 个监督周期: 6.28, 2024-6.27, 2025 | 3rd surveillance period 第 3 个监督周期: 6.28, 2025-6.27, 2026 |

Approval Number 2310541
Test Report: J-00468457

Water Regulations Approval Scheme Ltd.
Unit 13,
Willow Road,
Pen y Fan Industrial Estate,
Crumlin,
Gwent,
NP11 4EG

3rd November 2023

Angang Group Yongtong Ductile Cast Iron Pipe Co. Ltd
Yongtong Road,
Shuiye Town,
Anyang City,
Henan Province,
China

**WATER REGULATIONS APPROVAL SCHEME LTD. (WRAS)**
**MATERIAL APPROVAL**

The material referred to in this letter is suitable for contact with wholesome water for domestic purposes having met the requirements of BS6920-1:2000 and/or 2014 'Suitability of non-metallic products for use in contact with water intended for human consumption with regard to their effect on the quality of the water'.

The reference relates solely to its effect on the quality of the water with which it may come into contact and does not signify the approval of its mechanical or physical properties for any use.

**COATINGS, PAINTS & LININGS- FACTORY APPLIED PIPE & FITTINGS COATINGS.** **5030**

'AYYTCM-01'. Factory applied, grey coloured cement mortar.

Mix cement:sand:water in a 1:3.0:0.4 weight ratio and apply as per MSDS '20170508A1'. Air cure for 4 hours@23°C and the steam cure for 6 hours@60°C.

For use with water up to 65°C.

This material is only approved for the mixing and curing conditions that appear on the approval. If the mixing and/or curing conditions are varied from those specified on the approval then the material is not covered by the scope of the approval.

**APPROVAL NUMBER: 2310541**
**APPROVAL HOLDER: ANGANG GROUP YONGTONG DUCTILE CAST IRON PIPE CO. LTD**

The Scheme reserves the right to review approval.
Approval 2310541 is valid between October 2023 and October 2028

An entry, as above, will accordingly be included in the Water Fittings Directory on-line under the section headed, "Materials which have passed full tests of effect on water quality".

The Directory may be found at: www.wrasapprovals.co.uk/approvals-directory/

Yours Faithfully

**Ian Hughes**
**WRAS Approvals Manager**

安钢集团永通球墨铸铁管有限责任公司

**ANGANG GROUP YONGTONG DUCTILE CAST IRON PIPE CO., LTD.**

**To: International Integrated Solutions LTD (IISCO).**

Date: 02/01/2024

Subject: Guarantee for Service Life of Yongtong Ductile Cast Iron Pipe & Fitting.

Dear Sirs,

We, Angang Group Yongtong Ductile Cast Iron Pipe Co., Ltd, hereby guarantee the service life of Ductile Iron Pipes & Fittings can last 50 years.

Thanks & Best Regards

Angang Group Yongtong Ductile Cast Iron Pipe Co.,Ltd

安钢集团

地址：河南省安阳县永治镇永环路 455133
Address: Yongtong Road, Shuiye Town, Anyang City, Henan Province, 455133 P.R.China
Tel:+86 372 5803772 Fax: +86 372 5803125 http://www.ytpipes.com.cn

GUARANTEE 50 YEARS

IISCO
الشركة الدولية للحلول المتكاملة
INTERNATIONAL INTEGRATED SOLUTIONS Co

# CONTENTS


TYPE APPROVAL C
TYPE APPROVAL CE


FACTORY APPROVAL CERTIFICATE


FACTORY APPROVAL CERTIFICATE


SGS


UNIVERSAL CERTIFICATION CENTRE CO., LTD.
QUALITY MANAGEMENT SYSTEM CERTIFICATE
LIAONING EVER FOUNDRY CO., LTD.
GB/T19001-2008/ISO9001:2008
"THE PRODUCTION OF DUCTILE IRON PIPE FITTINGS"
IAF

# Process Steps for Manufacturing of Ductile Iron Pipe Fittings

EVER Foundry utilises the Lost-foam casting process together with induction melting facilities in the production of ductile iron pipe fittings from DN50-2600mm. The most popular use of the lost foam process places expanded foam patterns in compacted unbonded sand, patterns are coated with refractory, dried, placed in a flask, backed up with compacted unbonded sand, and liquid metal poured onto the pattern to replace the foam. The process has the capability to make dimensionally accurate, intricate, good surface quality of final casting fittings.

# Mold foam pattern sections

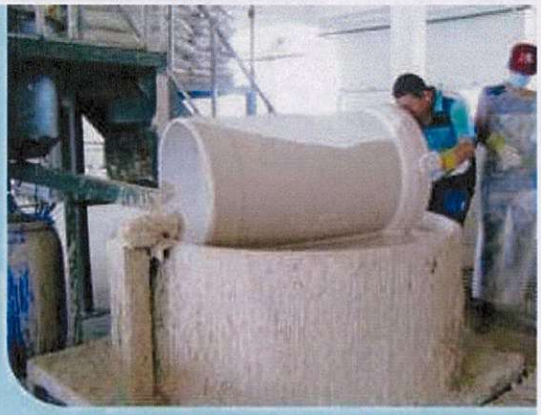

The process uses expanded polystyrene(EPS), expanded polymethyl methacrylate(EPMMA), blended EPS and EPMMA and coplymers of the two compounds to form patters that are consumed as each fittings is produced.

The beads are first pre-expanded to a target density. After stablilization, the beads are blown into a pattern cavity with air through a venturi gun.

When the pattern cavity is filled, the bead fusion cycle is begun, steam is passed from one side of the tool to the opposite side through vents, and then the steam blowing direction is reversed. The steam causes the beads to soften, to expand and fill the interpartical voids, and bond together to form a cohesive pattern of fittings' part. The pattern must then be cooled with water sprays on back of the tool. The tool is then opened, then pulls extracted, and then foam pattern ejected. Then, drying the patterns to control the dimensional changes to achieve dimensional consistency in the casting.

The foam pattern sections are ready for cutting and assembly after dimensional stablilization, and assembly requires the same precision needed in the cast part. Pattern sections are typically glued together using glue and tape. Multiple patterns can be glued to a gating system to form pattern clusters.

After assembly, fittings pattern clusters are coated with a thin layer of refractory, usually a water-based slurry that can be applied by dipping, spraying, or pouring over the pattern. Carefully control of the coating viscosity and rheology is necessary to obtain a uniform layer on each cluster. After application, the coating will be completely dried, then placed the dried cluster in a flask and backed up with sand using vibrating table. Compact and make the sand fills all internal pattern cavities and packs tightly around the cluster to provide support. After a fittings pattern cluster is backed up with sand, the mould is ready to be poured.

## Melting

Ductile pig iron and other raw materials are charged into the induction furnace in controlled quantities and melted. Take samples and check, till to the chemical components and temperature are qualified according to the specification.

Ductile iron is produced when a measured volume of this base iron is tapped into a pouring ladle which has been precharged with a weighed amount of inoculants alloy, whilst the nodularised iron occurs the final inoculation.

## Pouring metal

The qualified liquid metal will be transferred to the platform for pouring casting, the vaccum pump system will work before pouring in order to keep the sand inside the flask tightened. Then, the liquid metal will be poured into the pattern of castings with a suitable pouring rate to form the fittings. The foam is evaporated as the metal take the shape of the casting cluster. The pouring rate must be as rapid as possible to keep the sprue full to avoid mold collapse and to provide a constant metallostatic head pressure. After pouring, the cluster is allowed to solidify in the flask prior to be shaken out.

## Cleaning and Machining

After shaken out, the cluster proceeds to the casting finishing area for sprue, gate and riser removal. The sand is reprocessed by classification and cooling to be re-used. The fittings will be shot-blast, grind the specified surface acceptance standards. Machining and drilling will be done after cleaning. Then a zinc-rich paint layer will be covered on the external surface of fittings.

## Hydrostatic Pressure Test

Each fittings will be checked by hydro-test machine in order to guarantee its leak-tightness. Fill water into the fittings, apply with high pressure state in the standards for a duration time not less than 30 seconds, no detect leakage or sweat.

# Lining and Coating

Qualified fittings shall receive a internal cement mortar lining in the following type

- --a) Ordinary portland cement
- --b) Sulphate resisting cement
- --c) High-Aluminum cement

The mortar of lining compose of cement, sand and water,the surface of the cement mortar lining after curing shall be uniformly smooth then curing for at least 48 hours make the mortar solidified, then a bitumen layer will be covered on the external surface of fittings. Then the fittings will be moved to the warehouse and ready for dispatch.

Request by the client, Fusion bond Epoxy Powder or Polyurethane coating will be applied as the coating and lining.

# fusion bonded

## epoxy coating

A state-of-the-art automated facility has been created to coat DI fittings with powdered epoxy by fusion bonding process.

Advantages of F. B. E.

- gives high glass and smooth coatings with excellent adhesion
- difficult shapes can be coated evenly
- provides enhanced corrosion resistant properties
- a choice of Blue (WRAS approved) or Red colours for water or sewage applications is available

Applicable standard

- EN14901
- Film thickness: min 250 microns
- Adhension: 8Mpa, min. 6 Mpa
- Impact test: 5J by weight drop
- Cross linkage: MIBK test
- Holiday/porosity: high voltage test


光荣 安全为











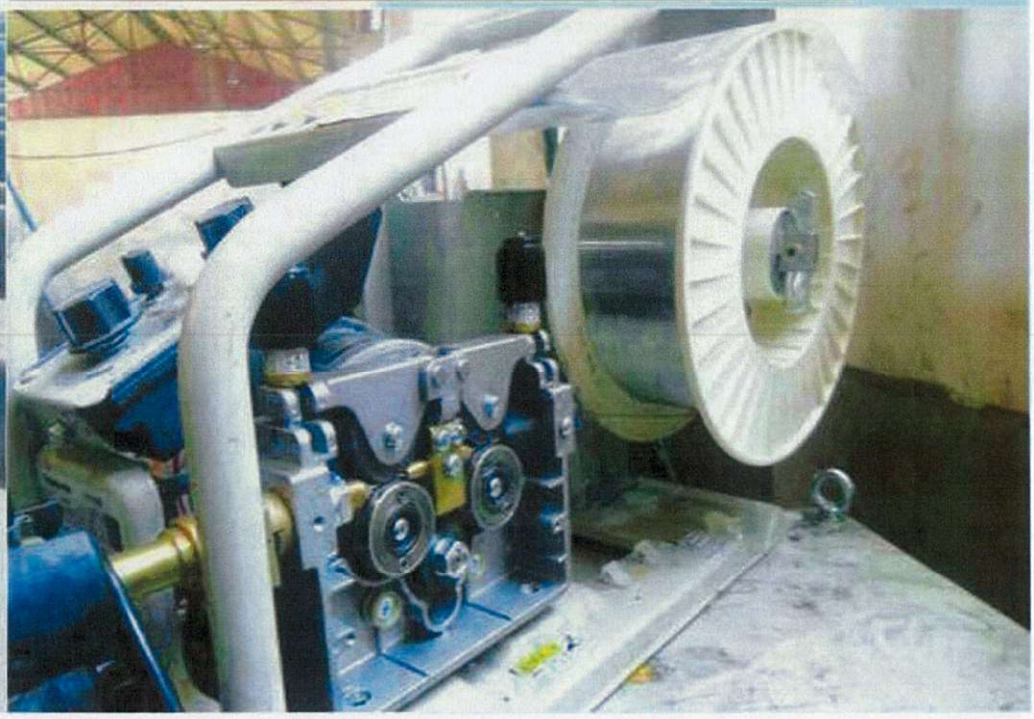

# Welded

## flanged pipes

Welded flanged pipes are made by heat-shrinkage method using class K9 pipe up to 6.0m length. All flanged pipe are normally lined with cement mortar and has outside zinc and bitumen coating. Screwed flange pipes are also available.

# Flow Diagram

## Manufacturing Process of Lost Foam Casting Ductile Iron Fittings

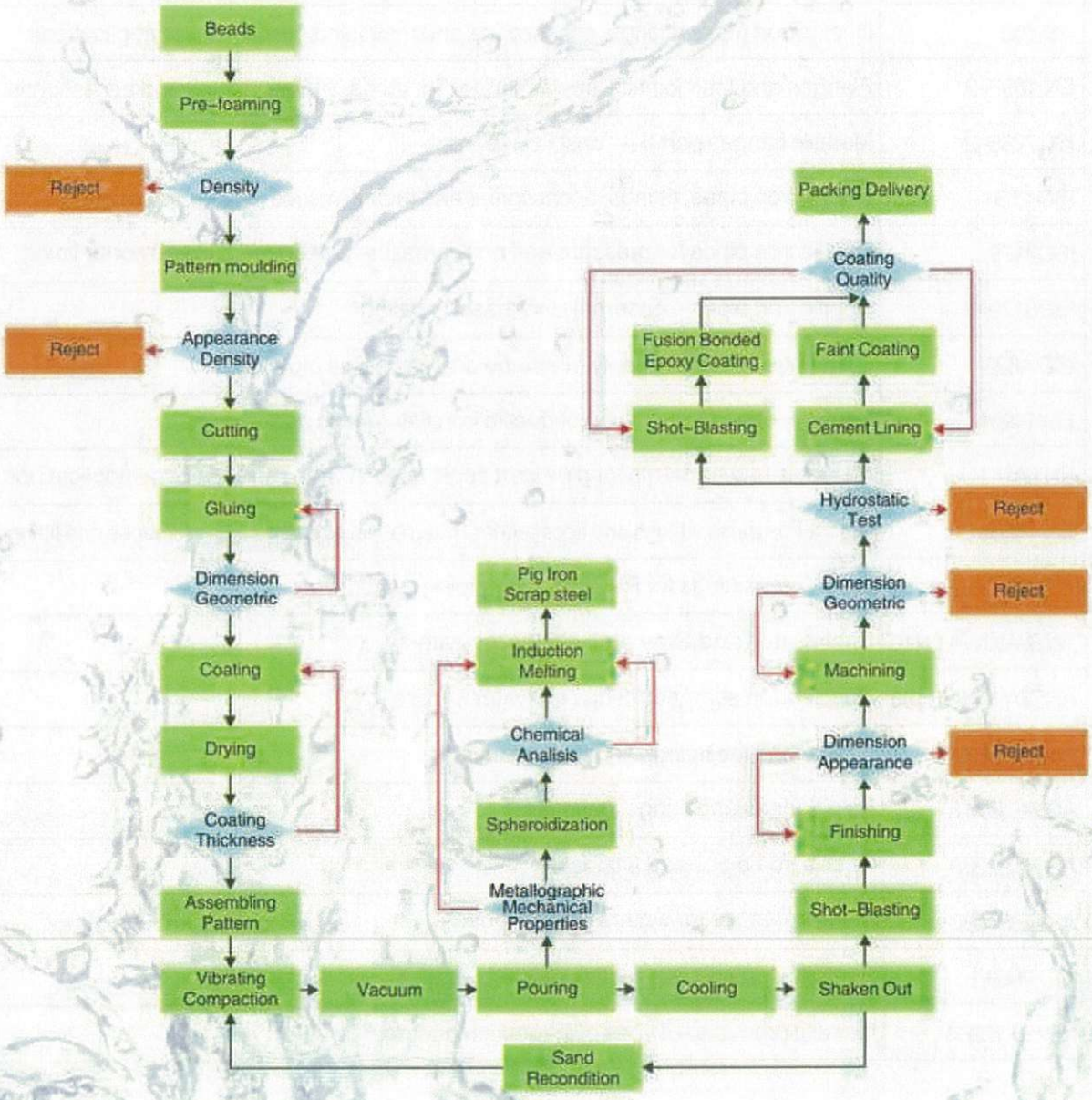

# QUALITY CONTROL PLAN

## DUCTILE IRON FITTINGS DN 50 to DN 2600mm
(for WATER or SEWERAGE PIPELINES )

| *Part or all of the following standards according to project specifications* | |
|---|---|
| ISO 9001 | Quality management system – Requirements |
| GB 13295 | Ductile iron pipes, fittings and accessories for water or gas applications |
| EN 545 | Ductile iron pipes, fittings, accessories and their joints for water pipelines |
| EN 598 | Ductile iron pipes, fittings, accessories and their joints for sewerage applications. |
| EN 1092-2 | Flanges and their joints. Circular flanges for pipes, valves, fittings and accessories |
| ISO7005-2 | Metallic flanges part II -- cast iron flanges |
| ISO 2531 | Ductile iron pipes, fittings, accessories and their joints for water applications |
| ISO4179 | Ductile iron pipes for pressure and non-pressure pipelines-cement mortar lining |
| ISO8179-2 | Ductile iron pipes--External zinc-based coating |
| ISO 4633 | Joint rings for water supply, drainage and sewerage pipelines |
| EN 14901 | Epoxy coating (heavy duty) of ductile iron fittings and accessories |
| EN 681-1 | Materials requirements for pipe joint seals used in water and drainage applications |
| EN 15655 | Ductile iron pipes, fittings and accessories. Internal polyurethane lining for pipes and fittings. |
| EN12842 | Ductile iron fittings for PVC-U or PE piping systems |
| ANSI/AWWA C110 | Ductile-Iron and Gray-Iron fittings for water |
| ANSI/AWWA C153 | Ductile-Iron compact fittings for water service |
| ASME B16.1 | Gray-iron pipe fittings and flanged fittings |
| ASME B16.5 | Pipe flanges and flanged fittings |
| AS/NZS2280 | Ductile iron pipes and fittings |
| AS/NZS4087 | Metallic flanges for waterworks purposes |
| ISO 2859/1 | Sampling procedures for inspection by attributes |
| NF EN 10204 | Metallic products – Types of inspection documents |

# QUALITY CONTROL PLAN

| N° | Inspection ITEM | Checks | CONTROL BY MANUFACTURER | | RECOMMENDED SECOND PARTY INSPECTION | |
|---|---|---|---|---|---|---|
| | | | Method | Frequency | Method | Frequency |
| 1 | Induction Furnace | – Chemistry | – Quick Cup chemical analysis | – Each Batch | – Review of Records | |
| 2 | Treated Metal | – Chemistry | – Spectrometer analysis | – Each Ladle | – Review of Records | |
| 3 | Cast Fittings | – Nodularity & Matrix (Metallurgical) | – Microscopy examination | – Each Ladle | – Review of Records | |
| 4 | Type of fittings | – DN<br>– Type of fitting<br>– Type of joint | – Visual<br>– Visual<br>– Visual | – Unit<br>– Unit<br>– Unit | – Visual<br>– Visual<br>– Visual | General inspection of the batch compared to the order |
| | | – Quantity by fitting type | – Counting | – Delivery | – Counting | Each delivery |
| 5 | General specifications | – Cast iron aspect (external)<br>– Cast iron aspect (socket)<br>– Dimensional | – Visual<br>– Visual<br>– Templates | – Unit<br>– Unit<br>– Unit | – Visual | General inspection of the batch |
| 6 | Mechanical Properties tests | – Mechanical strength (Rm.)<br>– Elongation (A %)<br>– Hardness ( HB) | – Standard<br>– Standard<br>– Standard | – Standard<br>– Standard<br>– Standard | – witness test | 10% ladles and review all the test record of the order |
| 7 | Leak Tightness | – Hydraulic test | – Visual+ anometer | – Unit | – witness test | 5% |
| 8 | Zinc paint plus Bitumen coating | – Thickness<br>– Aspect | – Magnetic measure<br>– Visual | – 1/shift<br>– Unit | – Magnetic measure<br>– Visual | Sampling and recording according to ISO 2859-1 control level S1 |
| 10 | Epoxy coating | – Thickness<br>– Aspect | – Magnetic measure<br>– Visual | – Unit<br>– Unit | – Magnetic measure<br>– Visual | Sampling and recording according to ISO 2859-1 control level S1 |
| | | – Cross linkage<br>– Impact test 5J | – MIBK test<br>– Weight drop | – 1/shift<br>– 1/shift | – witness | |
| | | – Adhesion | – Punch separation | – 1/shift | – witness | |
| | | – Holiday/porosity | – High voltage test | – 1/shift | – witness | |

# QUALITY CONTROL PLAN

## DUCTILE IRON FITTINGS DN 50 to DN 2600mm
(for WATER or SEWERAGE PIPELINES )

| N° | Inspection ITEM | Checks | CONTROL BY MANUFACTURER | | RECOMMENDED SECOND PARTY INSPECTION | |
|---|---|---|---|---|---|---|
| | | | Method | Frequency | Method | Frequency |
| 11 | Marking | – Molding marks, sticker, paint, etc... | – Visual | – Unit | Visual : conformity control of each marking in accordance with specificitions of the order | |
| 12 | Packaging | – Aspect | – Visual | – Unit | – Visual inspection of the batch | |
| 13 | Rubber gaskets | – Conformity to the order<br>– Quantity<br>– Packaging<br>– Marking | – Visual | – Each delivery | – Visual | Each inspection |
| 14 | Quality system | – Conformity to ISO 9001-2008 | – Approved by accredited third party | – 1 audit yearly | – Check the validity | Once for the order |
| 15 | Inspection mark | | | | – Third party logo | Each controlled fitting |
| 16 | Certificate of compliance<br>– Certificate of compliance based on production tests.<br>The certificate specifies that the delivery products have been manufactured and controlled in conformity with the applicable standards within the framework of the order. | | Certificates prepared by the supplier include :<br>• Mechanical test results (Rm, A%, HB)<br>• Tightness test results<br>• The delivery check (description and quantity) | | Control and signature of the certificates | Each inspection |
| 17 | Third party inspection report | Writing report including :<br>• Measurement and test apparatuses certificates of conformity for production controls and also for the third party tests.<br>• Recordings carried out by third party inspector.<br>• Manufacturer certificates | | | | Each inspection |

# Technical specification of Ductile Iron Pipe Fittings

## Permissible deviation on lengths of fittings

| Type of Fittings | DN(mm) | Deviation(mm) |
|---|---|---|
| Flange sockets, Flange spigots, collars, Tapers | 80–1200 | ± 25 |
| | 1400–2000 | ± 35 |
| Tees | 80–1200 | +50<br>–25 |
| | 1400–2000 | +75<br>–35 |
| 90° (1/4) Bends | 80–2000 | ± (15+0.03DN) |
| 45° (1/8) Bends | 80–2000 | ± (10+0.025DN) |
| 22° 30′ (1/16) Bends | 80–1200<br>1400–2000 | ± (10+0.02DN)<br>± (10+0.025DN) |
| 11° 15′ (1/32) Bends | | |



## Limit deviations on lengths

| Type of Fittings | DN(mm) | Limit Deviations(mm) |
|---|---|---|
| Fittings for socketed joints | 80–1200 | ± 25 |
| Pipe and Fittings for Flanged joints | 80–2000 | ± 10 |



## Chemical Analysis

Chemical elements of metal shall fall within below range

| Element | C | Si | Mn | S | P | Mg | RE |
|---|---|---|---|---|---|---|---|
| % | 3.4~3.9 | 2.5~3.0 | ≤0.4 | ≤0.02 | ≤0.08 | 0.02~0.06 | 0.02~0.04 |

辽宁[illegible]铸业股份有限公司
检 测 报 告

## Mettallurgical microscopy examination

| Item | Nodulizing Rate | Ferrite | Pearlite | Cementite |
|---|---|---|---|---|
| % | ≥70 | ≥50 | ≤30 | ≤5 |

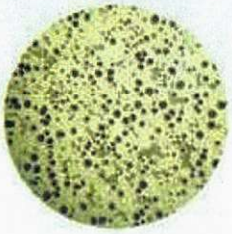

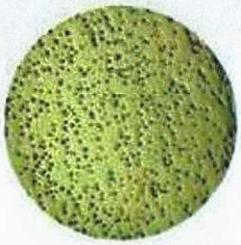

## Mechanical properties

Fittings and accessories of ductile iron shall have the properties given below

| Item | Tensile strength N/MM² | Elongation % | Brinell hardness HB |
|---|---|---|---|
| | ≥420 | ≥5 | ≤250 |

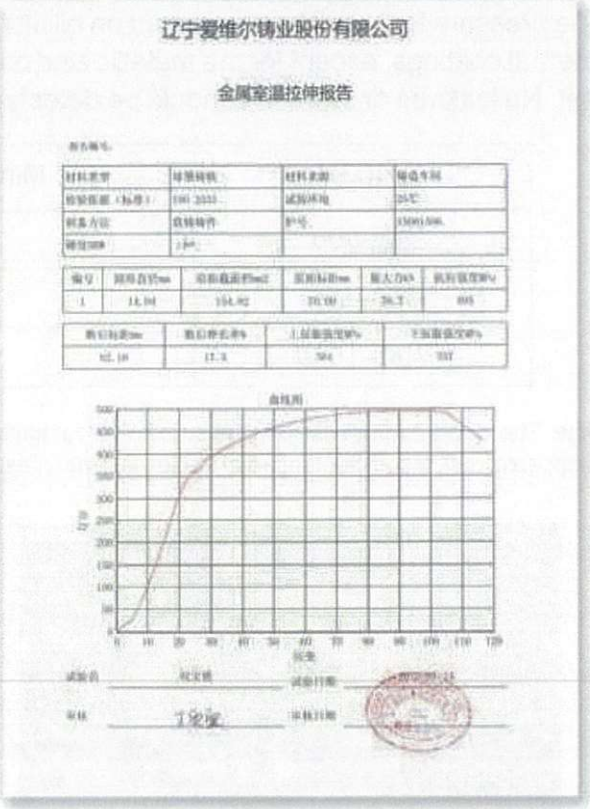

辽宁爱维尔铸业股份有限公司

金属室温拉伸报告

| | | | |
|---|---|---|---|
| 材料类型 | 球墨铸铁 | 材料来源 | 铸造车间 |
| 检验依据（标准） | ISO 2531 | 试验环境 | 24℃ |
| 制备方法 | 直铸铸件 | 炉号 | [illegible] |
| 铸型材料 | 干砂 | | |

| 编号 | 原始直径mm | 原始截面积mm² | 原始标距mm | 最大力kN | 抗拉强度MPa |
|---|---|---|---|---|---|
| 1 | 14.04 | 154.92 | 70.00 | 76.7 | 495 |

| 断后标距mm | 断后伸长率% | 上屈服强度MPa | 下屈服强度MPa |
|---|---|---|---|
| 82.10 | 17.3 | 364 | 337 |



试验员 [illegible] 试验日期 [illegible]

审核 [illegible] 审核日期 [illegible]

## Wall Thickness

The minimum wall thickness of fittings is 7mm, limit deviation is −2.3mm

The nominal wall thickness: e=K(0.5+0.001DN), limit deviation is −(2.3+0.001DN)mm

The nominal wall thickness of different size fittings are listed in below table: in mm

| DN | 80 | 100 | 150 | 200 | 250 | 300 | 350 | 400 | 450 | 500 | 600 | 700 | 800 | 900 | 1000 | 1100 | 1200 | 1400 | 1600 | 1800 | 2000 |
|---|---|---|---|---|---|---|---|---|---|---|---|---|---|---|---|---|---|---|---|---|---|
| K9 | 6.0 | 6.1 | 6.3 | 6.4 | 6.8 | 7.2 | 7.7 | 8.1 | 8.6 | 9.0 | 9.9 | 10.8 | 11.7 | 12.6 | 13.5 | 14.4 | 15.3 | 17.1 | 18.9 | 20.7 | 22.5 |
| K12 | 7.0 | 7.2 | 7.8 | 8.4 | 9.0 | 9.6 | 10.2 | 10.8 | 11.4 | 12.0 | 13.2 | 14.4 | 15.6 | 16.8 | 18.0 | 19.2 | 20.4 | 22.8 | 25.2 | 27.6 | 30.0 |
| K14 | 8.1 | 8.4 | 9.1 | 9.8 | 10.5 | 11.2 | 11.9 | 12.6 | 13.3 | 14.0 | 15.4 | 16.8 | 18.2 | 19.6 | 21.0 | 22.4 | 23.8 | 26.6 | 29.4 | 32.2 | 35.0 |
| Toler-ance | −2.3 | −2.4 | −2.5 | −2.5 | −2.6 | −2.6 | −2.7 | −2.7 | −2.8 | −2.8 | −2.9 | −3.0 | −3.1 | −3.2 | −3.3 | −3.4 | −3.5 | −3.7 | −3.9 | −4.1 | −4.3 |

Note: the lower limit only is given, so as to ensure sufficient resistance to internal pressure

## Pressure test

The pressure test shall be carried out on all fittings before the application of their external and internal coatings, except for the metallic zinc coating of pipes which may be applied before the test. No leakage or sweating should be detected during test.

| DN(MM) | Minimum works test pressure(bar) |
|---|---|
| 80–300 | 25 |
| 350–600 | 16 |
| 700–1600 | 10 |

Note: The works hydrostatic test pressure is less for fittings than for pipes because the shape of the fittings makes it difficult to provide sufficient restraint to high internal pressure during the test.

## Lining

Fittings are supplied with manually applied cement mortar lining, the mortar of the lining is composed of cement, sand and water. The mortar contains by mass minimum one part of cement to 3.5 parts of sand.

The nominal thickness of the lining and the minimum permissible values are given in the table below

| DN (MM) | Nominal lining thickness (mm) | Minimum at one point (mm) |
|---|---|---|
| ≤300 | 4 | 2.5 |
| 350-600 | 5 | 3 |
| 700-1200 | 6 | 3.5 |
| 1400-2000 | 9 | 6 |

Note:The surface of the cement mortar lining shall be uniform and smooth. Trowel marks, protrusion of sand grains and surface texture inherent to the method of manufacture are acceptable.
Storage of fittings in hot, dry environment can cause metal expansion and mortar shrinkage which can result in dry lining developing areas of disbondment and shrinkage cracks exceeding the above given width. When the lining is re-exposed to water, it will swell by absorption of moisture and the cracks will close to conform to above table and will eventually heal by autogenous process.

## Coating

A layer of zinc-rich coating+bitumen shall be uniformly covered the whole surface of the casting and have a smooth regular appearance.
The mean mass of zinc rich painting shall not be less than 200g/m², the mean thickness of the coating shall be not less than 70 μm and the local minimum thickness shall be not less than 50 μm.


# Special Fittings

**Special designed fittings are available when requested**

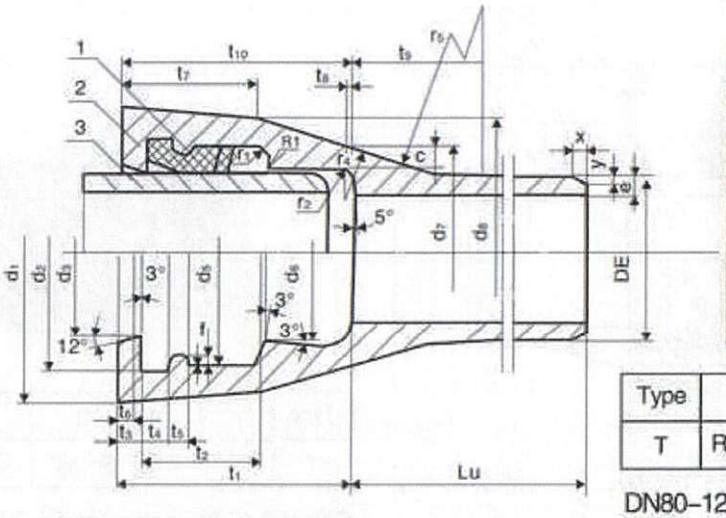


| Type | 1 | 2 | 3 |
|---|---|---|---|
| T | RubberRing | Socket | Spigot |

DN80–1200 Dimensions for Tyton Joint

●Table 1: Socket and Spigot Dimensions for Tyton (T) Joint

| Nominal Dia | Socket Dimensions (mm) | | | | | | | | | | | | |
|---|---|---|---|---|---|---|---|---|---|---|---|---|---|
| DN | $d_1$ | $d_2$ | | $d_3$ | | $d_5$ | | $d_6$ | | $d_7$ | $d_8$ | f | |
| 80 | 140 | 123 | | 100.5 | | 119.1 | | 103.2 | | 122 | 135 | | |
| 100 | 163 | 143 | ±1 | 120.5 | ±1 | 138.9 | ±1 | 123.4 | | 142 | 155.7 | 3.5 | 0 |
| 150 | 217 | 195 | | 172.5 | | 190.6 | | 175.3 | | 195.6 | 209 | | −0.8 |
| 200 | 278 | 250 | +1.5 | 224.5 | +1.5 | 245.2 | +1.5 | 227.8 | ±2 | 251 | 265 | 4 | |
| 250 | 336 | 301.5 | −1 | 276.5 | −1 | 296.9 | −1 | 279.7 | | 305 | 323 | | |
| 300 | 393 | 356.5 | +1.8 | 328.5 | +1.8 | 351.7 | +1.8 | 332.1 | | 368.5 | 384 | 4.5 | |
| 350 | 448 | 408 | −1 | 380.5 | −1 | 403.4 | −1 | 383.8 | | 410.3 | 433 | | |
| 400 | 500 | 462 | +2.1 −1 | 431.5 | +2.1 −1 | 457.2 | +2.1 −1 | 435.8 | ±2.5 | 463 | 482.4 | 5 | 0 |
| 450 | 540 | 514 | +2.2 −1 | 482.5 | +2.2 −1 | 509 | +2.2 −1 | 487 | ±2.5 | 518.4 | 533 | 5 | −1 |
| 500 | 604 | 568 | +2.4 −1 | 534.5 | +2.4 −1 | 562.6 | +2.4 −1 | 539.4 | ±3 | 569.7 | 590.6 | 5.5 | |
| 600 | 713 | 673.4 | +2.7 −1 | 637.5 | +2.7 −1 | 668.0 | +2.7 −1 | 642.6 | | 676.7 | 698.8 | 6 | |
| 700 | 824 | 788 | +3.5 −1 | 740.5 | +3.5 −1 | 779.3 | +3.5 −1 | 745.8 | ±3.5 | 789 | 813 | 7 | |
| 800 | 943 | 894 | +3.8 −1 | 844.5 | +3.8 −1 | 885.9 | +3.8 −1 | 850 | ±3.8 | 892.2 | 922.3 | 8 | 0 |
| 900 | 1052 | 1000 | +4.1 −1 | 947.5 | +4.1 −1 | 991.3 | +4.1 −1 | 953.2 | ±4.1 | 999.2 | 1030.5 | 9 | −1.2 |
| 1000 | 1158 | 1105 | +4.4 −1 | 1050.5 | +4.4 −1 | 1097.1 | +4.4 −1 | 1056.4 | ±4.4 | 1106 | 1139 | | |
| 1200 | 1377 | 1317 | +5 −1 | 1258 | +5 −1 | 1308 | +5 −1 | 1264 | ±5 | 1321 | 1355.6 | 10 | |
| 1400 | 1610 | 1529 | +5.6 −1 | 1465 | +5.6 −1 | 1509 | +5.6 −1 | 1471 | ±5.6 | 1535 | 1584.5 | | |
| 1600 | 1814 | 1740 | +6.2 −1 | 1673 | +6.2 −1 | 1717 | +6.2 −1 | 1678 | ±6.8 | 1748 | 1777 | | |

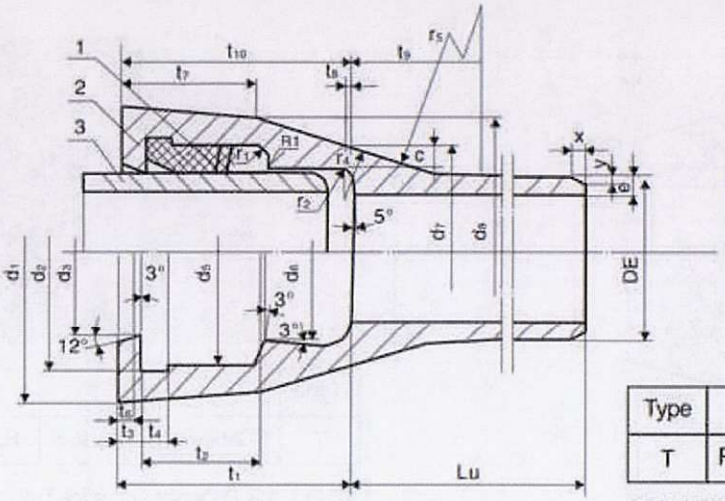


| Type | 1 | 2 | 3 |
|---|---|---|---|
| T | RubberRing | Socket | Spigot |

DN1400-1600 Dimensions for Tyton Joint

●Table 1: Socket and Spigot Dimensions for Tyton (T) Joint

| Nominal Dia | Socket Dimensions(mm) | | | | | | | | | | | | | | | Spigot Dimensions(mm) | | |
|---|---|---|---|---|---|---|---|---|---|---|---|---|---|---|---|---|---|---|
| DN | $t_1$ | $t_2$ | $t_3$ | $t_4$ | | $t_5$ | $t_6$ | $t_7$ | $t_8$ | $t_9$ | $t_{10}$ | $r_1$ | $r_2$ | $r_4$ | $r_5$ | DE | X | Y |
| 80 | 85 | 40 | 12 | 6 | | | | 48 | | 39 | 80 | | | 22 | 62 | 98 +1 | 6 | 2 |
| 100 | 88 | 40 | 12 | 6 | | 5 | 8 | | 5 | 39 | 88 | | 5 | 17 | 68 | 118 −2.8 | 9 | 3 |
| 150 | 94 | 40 | 12 | 6 | | | | 48 | | 43 | 94 | 4 | | 18.5 | 74 | 170 +1 −2.9 | 9 | 3 |
| 200 | 100 | 45 | 15 | 7 | | 6 | 10 | 56 | 6.2 | 48 | 100 | | 6 | 35 | 70 | 222 +1 −3 | 9 | 3 |
| 250 | 105 | 47 | 15 | 7 | | | | 58 | 6.8 | 48 | 105 | | | 36 | 72 | 274 +1 −3.1 | 9 | 3 |
| 300 | | 50 | 17 | 8.5 | 0 | 7 | 12 | 61 | 7.2 | 56 | 110 | | 7 | 37 | 74 | 326 +1 −3.3 | 9 | 3 |
| 350 | 110 | 50 | 17 | 8.5 | −0.5 | | | 61 | 5.1 | 55 | 113 | | | 24.5 | 98 | 378 +1 −3.4 | 9 | 3 |
| 400 | | 55 | 19 | 9.5 | | 8 | 14 | 68 | | 58 | 116 | 6 | 8 | 26 | 104 | 429 +1 −3.5 | 9 | 3 |
| 450 | 120 | 55 | 19 | 9.5 | | 8 | 15 | 68 | 6 | 66 | 120 | | 8 | 28 | 105 | 480 +1 −3.6 | 9 | 3 |
| 500 | 120 | 60 | 21 | 11 | | 9 | 16 | 75 | 7 | 63 | 120 | | 10 | 29 | 116 | 532 +1 −3.8 | 9 | 3 |
| 600 | | 65 | 21 | 12 | | 10 | | 80 | 9.2 | 62 | | | | 32 | 128 | 635 +1 −4 | 9 | 3 |
| 700 | 150 | 80 | 21 | 18 | | 12 | 16 | 90 | 10.6 | 77 | 150 | | | 35 | 140 | 738 +1 −4.2 | 15 | 5 |
| 800 | 160 | 85 | 21 | 18 | | 14 | 16 | 96.5 | 12.4 | 86.5 | 160 | 8 | 10 | 38 | 160 | 842 +1 −4.5 | 15 | 5 |
| 900 | 175 | 90 | 21 | 20 | | 16 | 16 | 103 | 14.2 | 92.5 | 175 | | | 42 | 175 | 945 +1 −4.8 | 15 | 5 |
| 1000 | 185 | 95 | 22 | | 0 | | 16 | 110 | 16 | 103 | 185 | | | 45 | 200 | 1048 +1 −5 | 15 | 5 |
| 1200 | 215 | 105 | 25 | 23 | −0.8 | 18 | 17 | 122 | 17.8 | 112 | 215 | 10 | 12 | 48 | 215 | 1255 +1 −5.5 | 15 | 5 |
| 1400 | 239 | 115 | 27 | 25 | | | 18 | 125 | 19 | 129 | 239 | 10 | 12 | 100 | 205 | 1462 +1 −6 | 20 | 7 |
| 1600 | 262 | 125 | 30 | 27 | | | 20 | 125 | 19 | 165 | 262 | 10 | 10 | 380 | 210 | 1668 +1 −6.5 | 21 | 7 |

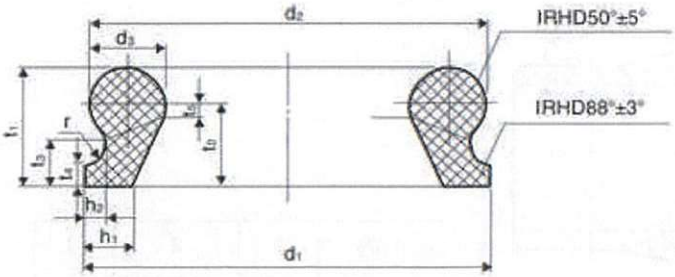


T-type Rubber RingDN80-1200

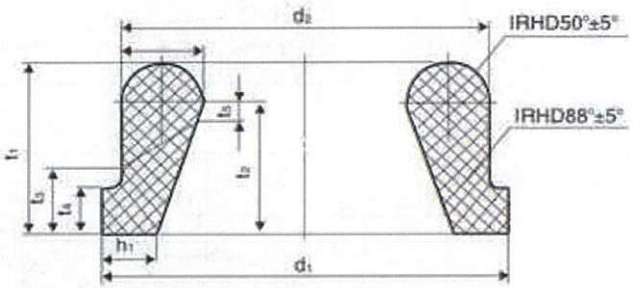


T-type Rubber RingDN1400-1600

●T-type Rubber Ring

| DN | $d_1$ | $d_2$ | $d_3$ | $h_1$ | $h_2$ | $t_1$ | $t_2$ | $t_3$ | $t_4$ | $t_5$ | r |
|---|---|---|---|---|---|---|---|---|---|---|---|
| 80 | 126 | 123 | 16 | 10 | 4.5 | 26 | 18 | 10 | 5 | 3 | 3 |
| 100 | 146 | 144 | 16 | 10 | 4.5 | 26 | 18 | 10 | 5 | 3 | 3.5 |
| 150 | 200 | 198 | 16 | 10 | 4.5 | 26 | 18 | 10 | 5 | 3 | 3.5 |
| 200 | 256 | 254 | 18 | 11 | 5 | 30 | 21 | 12 | 6 | 4 | 4 |
| 250 | 310 | 308 | 18 | 11 | 5 | 32 | 23 | 12 | 6 | 4 | 4 |
| 300 | 366 | 364 | 20 | 12 | 5.5 | 34 | 24 | 14 | 7 | 4 | 4.5 |
| 350 | 420 | 418 | 20 | 12 | 5.5 | 34 | 24 | 14 | 7 | 4 | 4.5 |
| 400 | 475 | 473 | 22 | 13 | 6 | 38 | 27 | 16 | 8 | 5 | 5 |
| 450 | 528 | 526 | 23 | 13 | 6 | 38 | 27 | 16 | 8 | 5 | 5 |
| 500 | 583 | 581 | 24 | 14 | 6.5 | 42 | 30 | 18 | 9 | 6 | 5.5 |
| 600 | 692 | 690 | 26 | 15 | 7 | 46 | 33 | 20 | 10 | 7 | 6 |
| 700 | 809 | 803 | 33.5 | 20 | 10 | 55 | 39 | 24 | 16 | 8 | 7 |
| 800 | 919 | 913 | 35.5 | 21 | 11 | 60 | 43 | 26 | 16 | 9 | 8 |
| 900 | 1026 | 1020 | 37.5 | 22 | 12 | 65 | 47 | 28 | 18 | 10 | 9 |
| 1000 | 1133 | 1127 | 39.5 | 23 | 12 | 70 | 51 | 30 | 18 | 10 | 9 |
| 1200 | 1352 | 1345 | 43.5 | 27 | 13.5 | 78 | 57 | 34 | 20 | 11 | 10 |
| 1400 | 1569 | 1549 | 41.5 | 27 | | 80 | 58 | 28 | 23 | 22 | |
| 1500 | 1677 | 1660 | 42 | 30 | | 70 | 49 | 20 | 25 | 22 | |
| 1600 | 1799 | 1779 | 42 | 32.5 | | 70 | 49 | 30 | 23 | 20 | |

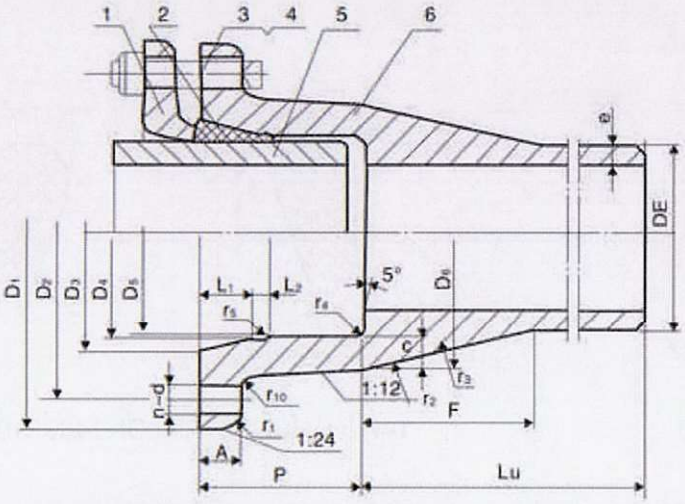


| Type | 1 | 2 | 3 |
|---|---|---|---|
| Mechanical K Type | Gland | RubberRing | Bolt |
| | 4 | 5 | 6 |
| | Nut | Spigot | Socket |

●Table 2: Socket and Spigot Dimensions for Mechanical (K) Joint

| Nominal Dia | Dimensions(mm) | | | | | | | | | | | | | | | | | Bolt | |
|---|---|---|---|---|---|---|---|---|---|---|---|---|---|---|---|---|---|---|---|
| DN | $D_1$ | $D_2$ | $D_3$ | DE | | $D_5$ | | $D_6$ | L1 | L2 | P | C | A | F | r1 | r2 | r3 | d | n |
| 100 | 234 | 188 | 148 | 130 | | 121 | +2 −1 | 140 | 33 | 9 | 80 | 8.4 | 19 | 50 | 8 | 28 | 100 | 23 | 4 |
| 150 | 288 | 242 | 200 | 182 | | 173 | +2 −1 | 194 | 33 | 9 | 80 | 9.1 | 20 | 53 | 8 | 18 | 110 | 23 | 6 |
| 200 | 341 | 295 | 252 | 234 | ±1 | 225 | +2 −1 | 247 | 33 | 9 | 80 | 9.8 | 20 | 57 | 8 | 32 | 115 | 23 | 6 |
| 250 | 395 | 349 | 304 | 286 | | 277 | +2 −1 | 301 | 33 | 9 | 80 | 10.5 | 21 | 60 | 10 | 20 | 125 | 23 | 8 |
| 300 | 455 | 409 | 360 | 342 | | 329 | +2 −1 | 358 | 33 | 13 | 110 | 11.2 | 22 | 68 | 10 | 35 | 135 | 23 | 8 |
| 350 | 508 | 462 | 412 | 394 | | 382 | +3 −1 | 410 | 33 | 13 | 110 | 11.9 | 23 | 72 | 10 | 45 | 145 | 23 | 10 |
| 400 | 561 | 515 | 463 | 445 | | 433 | +3 −1 | 462 | 33 | 13 | 110 | 12.6 | 23 | 75 | 10 | 40 | 150 | 23 | 12 |
| 450 | 614 | 568 | 514 | 496 | ±1.5 | 484 | +3 −1 | 515 | 33 | 13 | 110 | 13.3 | 24 | 78 | 10 | 50 | 150 | 23 | 12 |
| 500 | 667 | 621 | 566 | 548 | | 536 | +3 −1 | 568 | 33 | 13 | 110 | 14 | 25 | 82 | 10 | 55 | 160 | 23 | 14 |
| 600 | 773 | 727 | 669 | 651 | | 639 | +3 −1 | 675 | 33 | 13 | 110 | 15.4 | 26 | 89 | 10 | 55 | 170 | 23 | 14 |
| 700 | 892 | 838 | 780 | 758 | | 743 | +3.5 −2 | 781 | 43 | 14 | 120 | 16.8 | 28 | 96 | 10 | 50 | 190 | 27 | 16 |
| 800 | 999 | 942 | 884 | 862 | | 847 | +3.5 −2 | 888 | 43 | 14 | 120 | 18.2 | 29 | 103 | 10 | 52 | 208 | 27 | 20 |
| 900 | 1123 | 1057 | 987 | 965 | ±2 | 950 | +3.5 −2 | 994 | 43 | 14 | 120 | 19.6 | 31 | 110 | 10 | 50 | 225 | 33 | 20 |
| 1000 | 1231 | 1160 | 1090 | 1068 | | 1054 | +3.5 −3 | 1101 | 43 | 15 | 130 | 21 | 32 | 119 | 15 | 50 | 240 | 33 | 20 |
| 1200 | 1444 | 1378 | 1297 | 1275 | | 1261 | +3.5 −3 | 1314 | 43 | 15 | 130 | 24 | 35 | 133 | 15 | 85 | 250 | 33 | 28 |
| 1400 | 1657 | 1591 | 1504 | 1482 | ±2.5 | 1469 | +4 −3 | 1527 | 43 | 15 | 130 | 27 | 38 | 147 | 15 | 70 | 280 | 33 | 28 |
| 1600 | 1874 | 1808 | 1720 | 1690 | | 1678 | +4.5 −3 | 1740 | 59 | 17 | 160 | 29 | 41 | 163 | 15 | 50 | 354 | 33 | 30 |
| 1800 | 2089 | 2023 | 1927 | 1897 | ±2.8 | 1883 | +5 −4 | 1954 | 59 | 17 | 170 | 32 | 43 | 179 | 20 | 60 | 370 | 33 | 34 |
| 2000 | 2305 | 2239 | 2134 | 2104 | | 2091 | +5 −4 | 2168 | 59 | 17 | 180 | 35 | 46 | 195 | 20 | 120 | 380 | 33 | 36 |

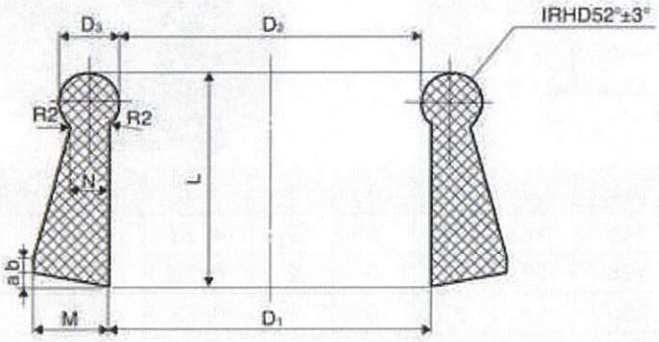


●K-type Rubber Ring

| DN | $D_1$ | $D_2$ | $D_3$ | L | M | N | a | b |
|---|---|---|---|---|---|---|---|---|
| 100 | 116 | 111 | 11 | 45 | 15 | 6 | 4 | 4 |
| 150 | 167 | 162 | 11 | 45 | 15 | 6 | 4 | 4 |
| 200 | 218 | 213 | 11 | 45 | 15 | 6 | 4 | 4 |
| 250 | 269 | 264 | 11 | 45 | 15 | 6 | 4 | 4 |
| 300 | 319 | 312 | 15 | 49 | 18 | 8 | 4 | 4 |
| 350 | 370 | 363 | 15 | 49 | 18 | 8 | 4 | 4 |
| 400 | 420 | 413 | 15 | 49 | 18 | 8 | 4 | 4 |
| 450 | 471 | 465 | 15 | 49 | 18 | 8 | 4 | 4 |
| 500 | 521 | 514 | 15 | 49 | 18 | 8 | 4 | 4 |
| 600 | 622 | 615 | 15 | 49 | 18 | 8 | 4 | 4 |
| 700 | 723 | 716 | 18 | 61 | 21 | 11 | 4 | 4 |
| 800 | 825 | 818 | 18 | 61 | 21 | 11 | 4 | 4 |
| 900 | 926 | 919 | 18 | 61 | 21 | 11 | 4 | 4 |
| 1000 | 1027 | 1020 | 18 | 62 | 21 | 11 | 4 | 5 |
| 1200 | 1230 | 1223 | 20 | 62 | 21.5 | 13 | 4 | 5 |
| 1400 | 1430 | 1423 | 20 | 62 | 21.5 | 13 | 4 | 5 |
| 1500 | 1532 | 1525 | 20 | 62 | 21.5 | 13 | 4 | 5 |
| 1600 | 1635 | 1628 | 23 | 80 | 27 | 15 | 4 | 5 |
| 1800 | 1833 | 1825 | 23 | 80 | 27 | 15 | 4 | 5 |
| 2000 | 2035 | 2027 | 23 | 80 | 27 | 15 | 4 | 5 |

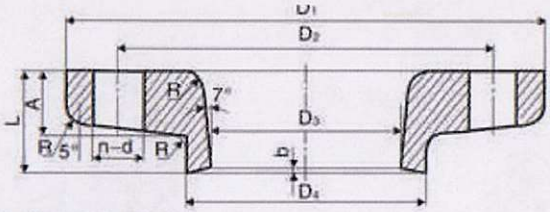


## ●Gland for K-type Joint

| DN | D1 | D2 | D3 | D4 | A | L | R | B | n-d | Kg/pc | Kg/2pcs |
|---|---|---|---|---|---|---|---|---|---|---|---|
| 100 | 234 | 188 | 122 | 146 | 16 | 35 | 5 | 2 | 4-23 | 4.1 | 8.2 |
| 150 | 288 | 242 | 174 | 198 | 17 | 36 | 5 | 2 | 6-23 | 5.7 | 11.4 |
| 200 | 341 | 295 | 226 | 250 | 18 | 37 | 5 | 2 | 6-23 | 7.5 | 17 |
| 250 | 395 | 349 | 278 | 302 | 19 | 38 | 5 | 2 | 8-23 | 9.5 | 19 |
| 300 | 455 | 409 | 330 | 354 | 20 | 39 | 5 | 2 | 8-23 | 12.2 | 24.4 |
| 350 | 508 | 462 | 382 | 406 | 21 | 40 | 5 | 2 | 10-23 | 14.6 | 29.2 |
| 400 | 561 | 515 | 433 | 457 | 22 | 41 | 7 | 2 | 12-23 | 17.2 | 34.4 |
| 500 | 667 | 621 | 536 | 560 | 24 | 43 | 7 | 2 | 14-23 | 22.9 | 45.8 |
| 600 | 773 | 727 | 639 | 663 | 25 | 44 | 7 | 2 | 14-23 | 28.5 | 57 |
| 700 | 892 | 838 | 743 | 773 | 26 | 45 | 7 | 2.5 | 16-27 | 38.6 | 77.2 |
| 800 | 999 | 945 | 847 | 877 | 28 | 47 | 9 | 2.5 | 20-27 | 47.4 | 94.8 |
| 900 | 1123 | 1057 | 950 | 980 | 29 | 48 | 9 | 2.5 | 20-33 | 61.9 | 123.8 |
| 1000 | 1231 | 1165 | 1054 | 1083 | 30 | 49 | 9 | 2.5 | 20-33 | 63.8 | 127.6 |
| 1100 | 1338 | 1272 | 1158 | 1187 | 31 | 50 | 9 | 2.5 | 24-33 | 68.5 | 137 |
| 1200 | 1444 | 1378 | 1262 | 1290 | 32 | 51 | 9 | 2.5 | 28-33 | 82.5 | 165 |
| 1400 | 1657 | 1591 | 1469 | 1497 | 34 | 53 | 9 | 3 | 28-33 | 104 | 208 |
| 1500 | 1766 | 1700 | 1573 | 1605 | 35 | 54 | 9 | 3 | 30-33 | 119 | 238 |
| 1600 | 1874 | 1808 | 1676 | 1711 | 36 | 55 | 9 | 3 | 30-33 | 123 | 246 |
| 1800 | 2089 | 2023 | 1883 | 1918 | 38 | 57 | 11 | 3 | 34-33 | 162 | 324 |
| 2000 | 2305 | 2239 | 2090 | 2125 | 40 | 59 | 11 | 3 | 36-33 | 196 | 392 |

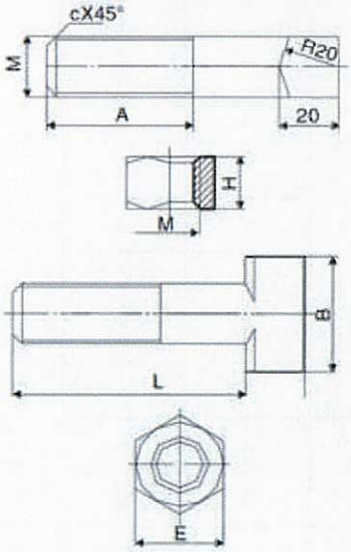


## ●T-head Bolts and Nuts for K-type Joint

| DN | Dia. | L | A | B | C | E | H |
|---|---|---|---|---|---|---|---|
| 100~150 | M20 | 95 | 65 | 40 | 3 | 30 | 16 |
| 200~300 | | 100 | | | | | |
| 350~600 | | 110 | | | | | |
| 700~800 | M24 | 120 | 75 | 55 | 4 | 36 | 21.5 |
| 900 | M30 | 130 | 85 | 75 | 5 | 46 | 25.6 |
| 1000 | | | | | | | |
| 1100 | | 140 | | | | | |
| 1200 | | | | | | | |
| 1400 | | 150 | | | | | |
| 1500 | | | | | | | |
| 1600 | | | | | | | |
| 1800 | | 160 | | | | | |
| 2000 | | | 90 | | | | |

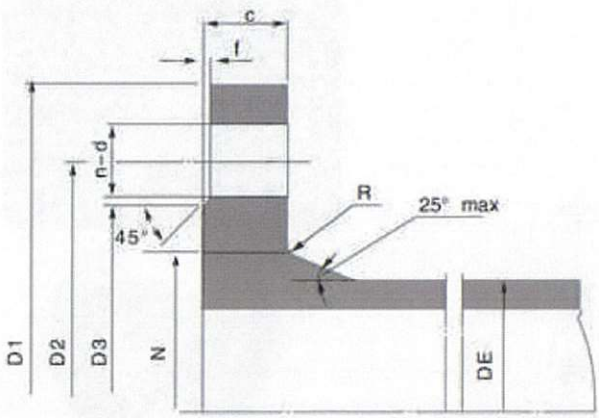


●PN10 Flange

| DN | D1 | D2 | D3 | c | f | N | R | n | d | Bolt Size | Mass (Kg) |
|---|---|---|---|---|---|---|---|---|---|---|---|
| 80 | 200 | 160 | 132 | 19 | 3 | 120 | 6 | 8 | 19 | M16*65 | 2. 9 |
| 100 | 220 | 180 | 156 | 19 | 3 | 140 | 6 | 8 | 19 | M16*65 | 3. 3 |
| 150 | 285 | 240 | 211 | 19 | 3 | 190 | 8 | 8 | 23 | M20*70 | 4. 9 |
| 200 | 340 | 295 | 266 | 20 | 3 | 246 | 8 | 8 | 23 | M20*70 | 6. 8 |
| 250 | 400 | 350 | 319 | 22 | 3 | 298 | 10 | 12 | 23 | M20*80 | 9. 6 |
| 300 | 455 | 400 | 370 | 24. 5 | 4 | 348 | 10 | 12 | 23 | M20*80 | 12. 8 |
| 350 | 505 | 460 | 429 | 24. 5 | 4 | 408 | 10 | 16 | 23 | M20*80 | 14. 1 |
| 400 | 565 | 515 | 480 | 24. 5 | 4 | 456 | 10 | 16 | 28 | M24*85 | 16. 3 |
| 450 | 615 | 565 | 530 | 24. 5 | 4 | 502 | 12 | 20 | 28 | M24*85 | 18. 1 |
| 500 | 670 | 620 | 582 | 26. 5 | 4 | 559 | 12 | 20 | 28 | M24*85 | 20. 8 |
| 600 | 780 | 725 | 682 | 30 | 5 | 658 | 12 | 20 | 31 | M27*100 | 30. 8 |
| 700 | 895 | 840 | 794 | 32. 5 | 5 | 772 | 16 | 24 | 31 | M27*100 | 40. 5 |
| 800 | 1015 | 950 | 901 | 35 | 5 | 876 | 16 | 24 | 34 | M30*110 | 54. 8 |
| 900 | 1115 | 1050 | 1001 | 37. 5 | 5 | 976 | 16 | 28 | 34 | M30*120 | 64. 3 |
| 1000 | 1230 | 1160 | 1112 | 40 | 5 | 1080 | 16 | 28 | 37 | M33*130 | 81. 4 |
| 1200 | 1455 | 1380 | 1328 | 45 | 5 | 1292 | 20 | 32 | 40 | M36*140 | 120. 9 |
| 1400 | 1675 | 1590 | 1530 | 46 | 5 | 1496 | 20 | 36 | 43 | M39*150 | 147. 8 |
| 1600 | 1915 | 1820 | 1750 | 49 | 5 | 1712 | 20 | 40 | 49 | M45*160 | 206. 4 |
| 1800 | 2115 | 2020 | 1950 | 52 | 5 | 1910 | 20 | 44 | 49 | M45*160 | 236. 3 |
| 2000 | 2325 | 2230 | 2150 | 55 | 5 | 2120 | 20 | 48 | 49 | M45*170 | 279. 4 |

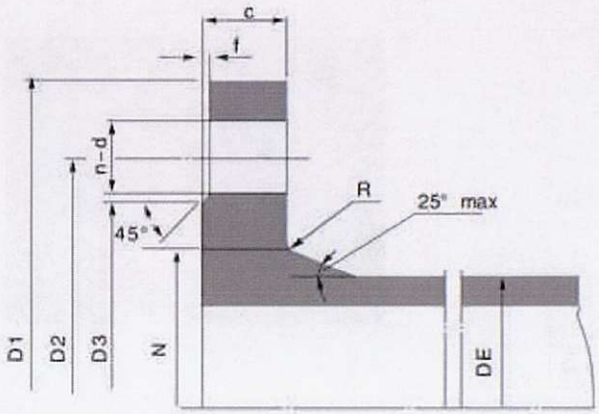


●PN16 Flange

| DN | D1 | D2 | D3 | c | f | N | R | n | d | Bolt Size | Mass (Kg) |
|---|---|---|---|---|---|---|---|---|---|---|---|
| 80 | 200 | 160 | 132 | 19 | 3 | 120 | 6 | 8 | 19 | M16*65 | 2. 9 |
| 100 | 220 | 180 | 156 | 19 | 3 | 140 | 6 | 8 | 19 | M16*65 | 3. 3 |
| 150 | 285 | 240 | 211 | 19 | 3 | 190 | 8 | 8 | 23 | M20*70 | 4. 9 |
| 200 | 340 | 295 | 266 | 20 | 3 | 246 | 8 | 12 | 23 | M20*70 | 6. 6 |
| 250 | 400 | 355 | 319 | 22 | 3 | 296 | 10 | 12 | 28 | M24*90 | 9. 2 |
| 300 | 455 | 410 | 370 | 24. 5 | 4 | 350 | 10 | 12 | 28 | M24*90 | 12. 4 |
| 350 | 520 | 470 | 429 | 26. 5 | 4 | 410 | 10 | 16 | 28 | M24*90 | 17. 2 |
| 400 | 580 | 525 | 480 | 28 | 4 | 458 | 10 | 16 | 31 | M27*100 | 21. 9 |
| 450 | 640 | 585 | 548 | 30 | 4 | 516 | 12 | 20 | 31 | M27*100 | 26. 7 |
| 500 | 715 | 650 | 609 | 31. 5 | 4 | 576 | 12 | 20 | 34 | M30*110 | 37. 0 |
| 600 | 840 | 770 | 720 | 36 | 5 | 690 | 12 | 20 | 37 | M33*120 | 57. 3 |
| 700 | 910 | 840 | 794 | 39. 5 | 5 | 760 | 16 | 24 | 37 | M33*120 | 55. 6 |
| 800 | 1025 | 950 | 901 | 43 | 5 | 862 | 16 | 24 | 40 | M36*140 | 74. 0 |
| 900 | 1125 | 1050 | 1001 | 46. 5 | 5 | 962 | 16 | 28 | 40 | M36*140 | 88. 2 |
| 1000 | 1255 | 1170 | 1112 | 50 | 5 | 1076 | 16 | 28 | 43 | M39*150 | 122. 9 |
| 1200 | 1485 | 1390 | 1328 | 57 | 5 | 1282 | 20 | 32 | 49 | M45*170 | 185. 2 |
| 1400 | 1685 | 1590 | 1530 | 60 | 5 | 1482 | 20 | 36 | 49 | M45*180 | 215. 9 |
| 1600 | 1930 | 1820 | 1750 | 65 | 5 | 1696 | 20 | 40 | 56 | M52*190 | 308. 4 |
| 1800 | 2130 | 2020 | 1950 | 70 | 5 | 1896 | 20 | 44 | 56 | M52*200 | 362. 2 |
| 2000 | 2345 | 2230 | 2150 | 75 | 5 | 2100 | 20 | 48 | 62 | M56*220 | 432. 2 |

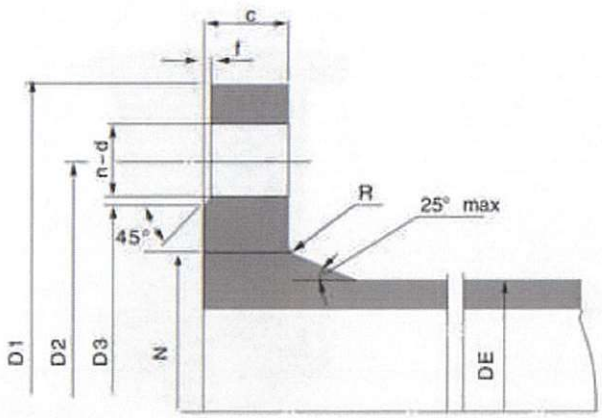


●PN25 Flange

| DN | D1 | D2 | D3 | c | f | N | R | n | d | Bolt Size | Mass (Kg) |
|---|---|---|---|---|---|---|---|---|---|---|---|
| 80 | 200 | 160 | 132 | 19 | 3 | 120 | 6 | 8 | 19 | M16*65 | 2. 9 |
| 100 | 235 | 190 | 156 | 19 | 3 | 142 | 6 | 8 | 23 | M20*70 | 3. 8 |
| 150 | 300 | 250 | 211 | 20 | 3 | 192 | 8 | 8 | 28 | M24*80 | 5. 9 |
| 200 | 360 | 310 | 274 | 22 | 3 | 252 | 8 | 12 | 28 | M24*80 | 8. 7 |
| 250 | 425 | 370 | 330 | 24. 5 | 3 | 304 | 10 | 12 | 31 | M27*90 | 13. 1 |
| 300 | 485 | 430 | 389 | 27. 5 | 4 | 364 | 10 | 16 | 31 | M27*90 | 18. 0 |
| 350 | 555 | 490 | 448 | 30 | 4 | 418 | 10 | 16 | 34 | M30*110 | 25. 5 |
| 400 | 620 | 550 | 503 | 32 | 4 | 472 | 10 | 16 | 37 | M33*120 | 33. 2 |
| 450 | 670 | 600 | 548 | 34. 5 | 4 | 520 | 12 | 20 | 37 | M33*120 | 42. 2 |
| 500 | 730 | 660 | 609 | 36. 5 | 4 | 580 | 12 | 20 | 37 | M33*120 | 48. 7 |
| 600 | 845 | 770 | 720 | 42 | 5 | 684 | 12 | 20 | 40 | M36*140 | 71. 5 |
| 700 | 960 | 875 | 820 | 46. 5 | 5 | 780 | 16 | 24 | 43 | M39*150 | 90. 3 |
| 800 | 1085 | 990 | 928 | 51 | 5 | 882 | 16 | 24 | 49 | M45*160 | 123. 2 |
| 900 | 1185 | 1090 | 1028 | 55. 5 | 5 | 982 | 16 | 28 | 49 | M45*170 | 148. 6 |
| 1000 | 1320 | 1210 | 1140 | 60 | 5 | 1086 | 16 | 28 | 56 | M52*180 | 200. 7 |
| 1200 | 1530 | 1420 | 1350 | 69 | 5 | 1296 | 20 | 32 | 56 | M52*200 | 284. 7 |
| 1400 | 1755 | 1640 | 1560 | 74 | 5 | 1508 | 20 | 36 | 62 | M56*220 | 368. 1 |
| 1600 | 1975 | 1860 | 1780 | 81 | 5 | 1726 | 20 | 40 | 62 | M56*230 | 485. 5 |
| 1800 | 2195 | 2070 | 1985 | 88 | 5 | 1920 | 20 | 44 | 70 | M64*260 | 601. 9 |
| 2000 | 2425 | 2300 | 2210 | 95 | 5 | 2150 | 20 | 48 | 70 | M64*270 | 784. 9 |

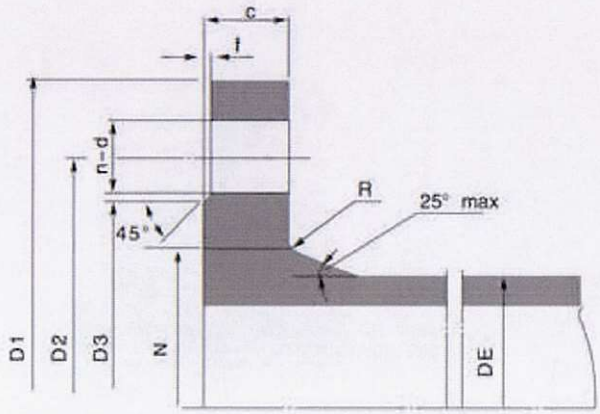


●PN40 Flange

| DN | D1 | D2 | D3 | c | f | N | R | n | d | Bolt Size | Mass (Kg) |
|---|---|---|---|---|---|---|---|---|---|---|---|
| 80 | 200 | 160 | 132 | 19 | 3 | 120 | 6 | 8 | 19 | M16*65 | 2. 9 |
| 100 | 235 | 190 | 156 | 19 | 3 | 142 | 6 | 8 | 23 | M20*70 | 3. 8 |
| 150 | 300 | 250 | 211 | 26 | 3 | 192 | 8 | 8 | 28 | M24*90 | 8.0 |
| 200 | 375 | 320 | 284 | 30 | 3 | 254 | 8 | 12 | 31 | M27*100 | 14.0 |
| 250 | 450 | 385 | 345 | 34.5 | 3 | 312 | 10 | 12 | 34 | M30*110 | 23.2 |
| 300 | 515 | 450 | 409 | 39.5 | 4 | 378 | 10 | 16 | 34 | M30*120 | 33.5 |
| 350 | 580 | 510 | 465 | 40 | 4 | 432 | 10 | 16 | 37 | M33*130 | 46.7 |
| 400 | 660 | 585 | 535 | 48 | 4 | 498 | 10 | 16 | 40 | M36*140 | 66.9 |
| 450 | 685 | 610 | 560 | 50 | 4 | 522 | 12 | 20 | 40 | M36*150 | 65.5 |
| 500 | 755 | 670 | 615 | 52 | 4 | 576 | 12 | 20 | 43 | M39*150 | 82.3 |
| 600 | 890 | 795 | 735 | 58 | 5 | 686 | 12 | 20 | 49 | M45*170 | 124.1 |

# Tolerances on flange dimensions

Dimensions and tolerances in millimetres

| Dimensions for all types | | DN | | | | |
|---|---|---|---|---|---|---|
| | | DN50~100 | DN125~300 | DN350~600 | DN700~1200 | DN1400~2000 |
| Symbol | Designation | Suggested tolorances | | | | |
| D1 | Outside diameter | Not specified but the minimum shall provide a sufficient bearing area for standard hexagonal bolt | | | | |
| d3 | Facing diameter | +4.5<br>−4 | +5.5<br>−4.5 | +6.5<br>−5 | +8.5<br>−5.5 | +10<br>−6 |
| f1 | Facing height | Height: 2 / 3 / 4 / 5 / 6<br>Tolerances: +1 −1 / +1.5 −2 / +2 −3 / +2.5 −4 / +3 −5 | | | | |
| b1 | Flange thickness at edge | Thickness: <25 / 26 to 40 / 41 to 55 / 56 to 70 / >71<br>Tolerances: ±4 / ±4.5 / ±5 / ±6 / ±7 | | | | |
| L2 | Diameter of bolt holes | Diameter of bolt holes: <20 / >22<br>Tolerances: +0.5 0 / +1 0 | | | | |
| D2 | Diameter of bole circle | Diameter of bolt circle for bolt size: M10 / M12 to M24 / M27 to M45 / M52 / >M56<br>Tolerances: ±1 / ±1.5 / ±2 / ±3 / ±3.5 | | | | |
| – | Centre to centre of adjacent bolt holes | Conter to centre for bolt size: M10 / M12 to M24 / M27 to M45 / M52 / >M56<br>Tolerances: ±0.5 / ±0.75 / ±1 / ±1.5 / ±1.75 | | | | |
| – | Parallelism of bolting surface with joint surface | 2° max | | | | |
| 1) b=c−fi | | | | | | |


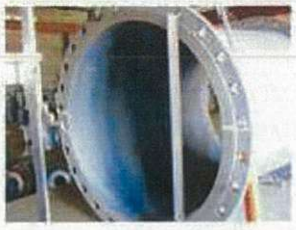

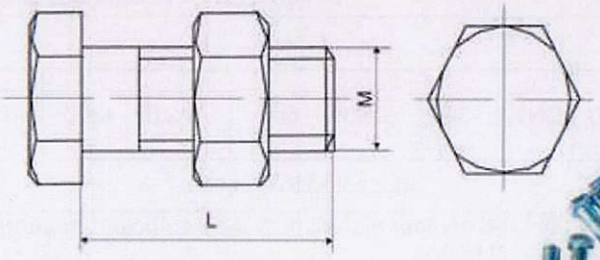


●Hexagonal Bolts&Nuts for flanges

| DN | PN10 | | PN16 | | PN25 | | PN40 | |
|---|---|---|---|---|---|---|---|---|
| | n | M X L | n | M X L | n | M X L | n | M X L |
| 80 | 8 | M16X65 | 8 | M16X65 | 8 | M16X65 | 8 | M16X65 |
| 100 | 8 | M16X65 | 8 | M16X65 | 8 | M20X70 | 8 | M20X70 |
| 125 | 8 | M16X65 | 8 | M16X65 | 8 | M24X80 | 8 | M24X80 |
| 150 | 8 | M20X70 | 8 | M20X70 | 8 | M24X80 | 8 | M24X90 |
| 200 | 8 | M20X70 | 8 | M20X70 | 12 | M24X80 | 12 | M27X100 |
| 250 | 12 | M20X80 | 12 | M24X90 | 12 | M27X90 | 12 | M30X110 |
| 300 | 12 | M20X80 | 12 | M24X90 | 16 | M27X90 | 16 | M30X120 |
| 350 | 16 | M20X80 | 16 | M24X90 | 16 | M30X110 | 16 | M33X130 |
| 400 | 16 | M24X90 | 16 | M27X100 | 16 | M33X120 | 16 | M36X140 |
| 450 | 20 | M24X90 | 20 | M27X100 | 20 | M33X120 | 20 | M36X150 |
| 500 | 20 | M24X90 | 20 | M30X110 | 20 | M33X120 | 20 | M39X150 |
| 600 | 20 | M27X100 | 20 | M33X120 | 20 | M36X140 | 20 | M45X170 |
| 700 | 24 | M27X100 | 24 | M33X120 | 24 | M39X140 | / | / |
| 800 | 24 | M30X110 | 24 | M36X140 | 24 | M45X160 | / | / |
| 900 | 28 | M30X120 | 28 | M36X140 | 28 | M45X170 | / | / |
| 1000 | 28 | M33X130 | 28 | M39X150 | 28 | M45X180 | / | / |
| 1100 | 32 | M33X130 | 32 | M39X160 | 32 | M52X180 | / | / |
| 1200 | 32 | M36X140 | 32 | M45X170 | 32 | M52X200 | / | / |
| 1400 | 36 | M39X150 | 36 | M45X180 | 36 | M56X220 | / | / |
| 1500 | 36 | M39X150 | 36 | M52X190 | 36 | M56X230 | / | / |
| 1600 | 40 | M45X160 | 40 | M52X190 | 40 | M56X230 | / | / |
| 1800 | 44 | M45X160 | 44 | M52X200 | 44 | M64X260 | / | / |
| 2000 | 48 | M45X170 | 48 | M56X220 | 48 | M64X270 | / | / |
| 2200 | 52 | M52X190 | 52 | M56X230 | / | / | / | / |
| 2400 | 56 | M52X200 | 56 | M56X240 | / | / | / | / |
| 2600 | 60 | M52X200 | 60 | M56X250 | / | / | / | / |

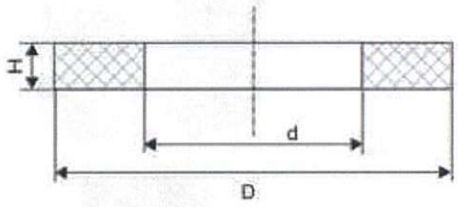


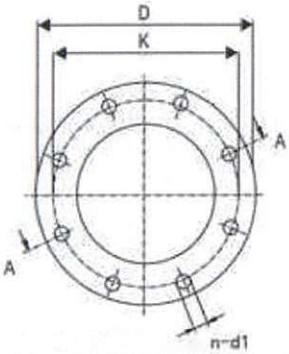


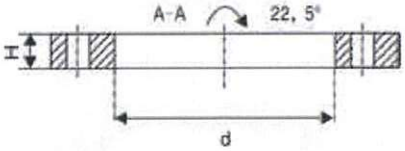


## ●Flange Rubber Gasket-Half Face(IBC)

| DN | D | d | H |
|---|---|---|---|
| | PN16 | | |
| 80 | 132 | 80 | 3 |
| 100 | 156 | 100 | 3 |
| 150 | 211 | 150 | 3 |
| 200 | 266 | 200 | 3 |
| 250 | 319 | 250 | 3 |
| 300 | 370 | 300 | 4 |
| 350 | 429 | 350 | 4 |
| 400 | 480 | 400 | 4 |
| 450 | 548 | 450 | 4 |
| 500 | 609 | 500 | 4 |
| 600 | 720 | 600 | 5 |
| 700 | 794 | 700 | 5 |
| 800 | 901 | 800 | 5 |
| 900 | 1001 | 900 | 5 |
| 1000 | 1112 | 1000 | 5 |
| 1100 | 1218 | 1100 | 5 |
| 1200 | 1328 | 1200 | 5 |
| 1400 | 1542 | 1400 | 5 |
| 1600 | 1765 | 1620 | 5 |
| 1800 | 1965 | 1820 | 5 |
| 2000 | 2170 | 2020 | 5 |

## ●Flange Rubber Gasket-Full Face for PN16

| DN | D | d | k | $d_1$ | H |
|---|---|---|---|---|---|
| DN80 | 200 | 80 | 160 | 19 | 6 |
| DN100 | 220 | 100 | 180 | 19 | 6 |
| DN150 | 285 | 150 | 240 | 23 | 6 |
| DN200 | 340 | 200 | 295 | 23 | 6 |
| DN250 | 400 | 250 | 355 | 23 | 6 |
| DN300 | 455 | 300 | 410 | 28 | 6 |
| DN350 | 520 | 350 | 470 | 28 | 7 |
| DN400 | 580 | 400 | 525 | 30 | 7 |
| DN500 | 715 | 500 | 650 | 30 | 6 |
| DN600 | 840 | 600 | 770 | 37 | 7 |
| DN700 | 910 | 700 | 840 | 37 | 7 |
| DN800 | 1025 | 800 | 950 | 40 | 7 |
| DN900 | 1125 | 900 | 1050 | 41 | 7 |
| DN1000 | 1255 | 1000 | 1170 | 43 | 7 |
| DN1200 | 1485 | 1200 | 1390 | 51 | 7 |
| DN1400 | 1685 | 1400 | 1590 | 51 | 7 |
| DN1600 | 1930 | 1600 | 1820 | 58 | 7 |

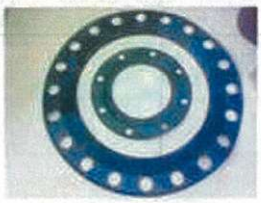

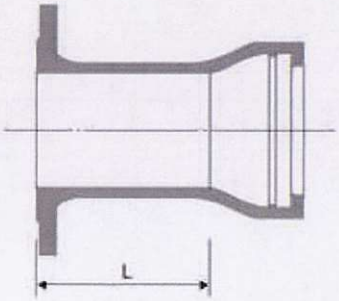


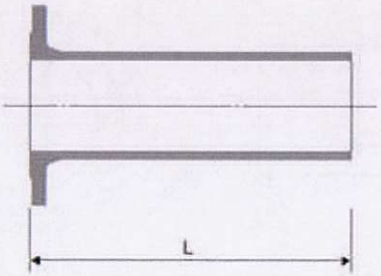


●Flange Socket

| DN | L | T-type Mass ( Kg ) | | | K-type Mass ( Kg ) | | |
|---|---|---|---|---|---|---|---|
| | | PN10 | PN16 | PN25 | PN10 | PN16 | PN25 |
| 80 | 130 | 7.4 | 7.4 | 7.4 | 9.6 | 9.6 | 9.6 |
| 100 | 130 | 9 | 9 | 9.5 | 11.4 | 11.4 | 12.4 |
| 150 | 135 | 14.2 | 14.2 | 15.2 | 16.7 | 16.7 | 17.7 |
| 200 | 140 | 20.5 | 20 | 22 | 22.7 | 22.2 | 24.2 |
| 250 | 145 | 28 | 27.5 | 31.5 | 29.4 | 28.9 | 32.9 |
| 300 | 150 | 37 | 36.5 | 42 | 42.4 | 41.9 | 47.4 |
| 350 | 155 | 45 | 48 | 56 | 50.4 | 53.4 | 61.2 |
| 400 | 160 | 55 | 60 | 71 | 60.2 | 65.2 | 76.2 |
| 450 | 165 | 66.5 | 76.5 | 87.5 | 70.6 | 80.6 | 91.9 |
| 500 | 170 | 78 | 93 | 104 | 80.9 | 85.9 | 94.9 |
| 600 | 180 | 108 | 135 | 149 | 106 | 133 | 147 |
| 700 | 190 | 144 | 159 | 216 | 161 | 176 | 211 |
| 800 | 200 | 189 | 208 | 287 | 206 | 225 | 274 |
| 900 | 210 | 235 | 258 | 356 | 257 | 281 | 341 |
| 1000 | 220 | 293 | 324 | 458 | 293 | 324 | 458 |
| 1200 | 240 | 456 | 521 | 664 | 456 | 521 | 664 |
| 1400 | 310 | 759 | 820 | 960 | 654 | 723 | 882 |
| 1600 | 330 | 1185 | 1278 | 1438 | 897 | 999 | 1176 |
| 1800 | 350 | 1308 | 1421 | 1638 | 1137 | 1263 | 1503 |
| 2000 | 370 | | | | 1428 | 1581 | 1933 |

●Flange Spigot

| DN | L | Mass ( Kg ) | | |
|---|---|---|---|---|
| | | PN10 | PN16 | PN25 |
| 80 | 350 | 7.8 | 7.8 | 7.8 |
| 100 | 360 | 9.6 | 9.6 | 10.2 |
| 150 | 380 | 15.6 | 15.6 | 16.6 |
| 200 | 400 | 22.5 | 22.5 | 24.5 |
| 250 | 420 | 32 | 31.5 | 35.5 |
| 300 | 440 | 43 | 42.5 | 47.5 |
| 350 | 460 | 52 | 55 | 64 |
| 400 | 480 | 64 | 70 | 81 |
| 450 | 500 | 79 | 88 | 103 |
| 500 | 520 | 94 | 109 | 121 |
| 600 | 560 | 133 | 159 | 173 |
| 700 | 600 | 179 | 194 | 228 |
| 800 | 600 | 226 | 245 | 294 |
| 900 | 600 | 272 | 295 | 356 |
| 1000 | 600 | 328 | 369 | 447 |
| 1200 | 600 | 456 | 520 | 620 |
| 1400 | 710 | 664 | 732 | 884 |
| 1600 | 780 | 922 | 1024 | 1202 |
| 1800 | 850 | 1196 | 1322 | 1562 |
| 2000 | 920 | 1534 | 1687 | 2040 |

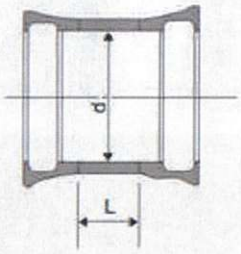


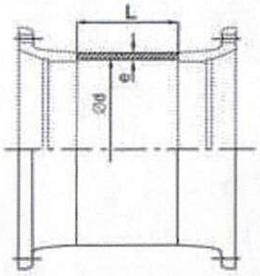


●Collar T-type & MJ-K-type (standard length)

| DN | d | L | Mass ( Kg ) | | K type include 2 glands |
|---|---|---|---|---|---|
| | | | T-type | K-type | |
| 80 | 109 | 160 | 7. 9 | 11. 6 | 19.8 |
| 100 | 130 | 160 | 9. 9 | 14. 7 | 22.9 |
| 150 | 183 | 165 | 15. 9 | 20. 3 | 31.7 |
| 200 | 235 | 170 | 23 | 27. 4 | 42.4 |
| 250 | 288 | 175 | 31. 5 | 34. 3 | 53.3 |
| 300 | 340 | 180 | 41 | 51. 8 | 76.2 |
| 350 | 393 | 185 | 52 | 62. 4 | 91.9 |
| 400 | 445 | 190 | 64 | 74. 4 | 109 |
| 450 | 498 | 195 | 91 | 96. 2 | 142 |
| 500 | 550 | 200 | 93 | 98. 8 | 145 |
| 600 | 655 | 210 | 129 | 125 | 182 |
| 700 | 760 | 220 | 172 | 202 | 280 |
| 800 | 865 | 230 | 223 | 250 | 345 |
| 900 | 970 | 240 | 282 | 319 | 443 |
| 1000 | 1075 | 250 | 349 | 349 | 477 |
| 1200 | 1285 | 270 | 560 | 560 | 725 |
| 1400 | 1477 | 340 | 816 | 816 | 1024 |
| 1600 | 1683 | 360 | 1395 | 1094 | 1340 |
| 1800 | 1889 | 380 | 1822 | 1426 | 1750 |
| 2000 | 2095 | 400 | | 1818 | 2210 |

●Collar MJ-K-type(long type)

| DN | d | L | Mass ( Kg ) | K type include 2 glands |
|---|---|---|---|---|
| 80 | 109 | 410 | 13.5 | 21.7 |
| 100 | 130 | 410 | 16.5 | 24.7 |
| 150 | 183 | 415 | 24.4 | 35.8 |
| 200 | 235 | 420 | 32.6 | 47.6 |
| 250 | 288 | 425 | 42.5 | 61.5 |
| 300 | 340 | 430 | 61.7 | 86.1 |
| 350 | 393 | 435 | 78.6 | 108 |
| 400 | 445 | 440 | 100.4 | 135 |
| 450 | 498 | 445 | 126.9 | 173 |
| 500 | 550 | 450 | 134.6 | 181 |
| 600 | 655 | 460 | 171.9 | 229 |
| 700 | 760 | 470 | 261.5 | 339 |
| 800 | 865 | 480 | 323.4 | 419 |
| 900 | 970 | 490 | 407.7 | 532 |
| 1000 | 1075 | 500 | 454.4 | 582 |
| 1200 | 1285 | 620 | 760.0 | 925 |
| 1400 | 1492 | 660 | 1076 | 1284 |
| 1600 | 1699 | 710 | 1421 | 1667 |
| 1800 | 1905 | 730 | 1828 | 2152 |
| 2000 | 2107 | 750 | 2301 | 2693 |

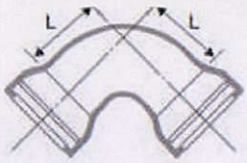


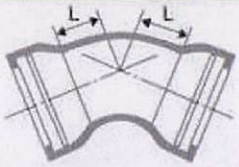


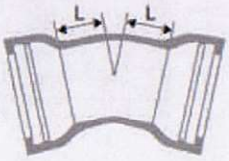


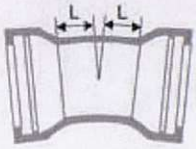


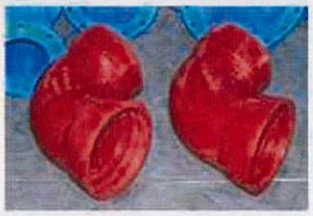

●Double Socket Bend 90°

| DN | L | Mass ( Kg ) | |
|---|---|---|---|
| | | T-type | K-type |
| 80 | 100 | 8. 6 | 11. 1 |
| 100 | 120 | 11. 4 | 16. 2 |
| 150 | 170 | 20. 5 | 25. 5 |
| 200 | 220 | 33. 0 | 37. 4 |
| 250 | 270 | 48. 5 | 51. 3 |
| 300 | 320 | 68. 0 | 78. 8 |
| 350 | 370 | 98. 4 | 109 |
| 400 | 420 | 129 | 139 |
| 450 | 470 | 163 | 172 |
| 500 | 520 | 204 | 210 |
| 600 | 620 | 303 | 300 |
| 700 | 720 | 436 | 428 |
| 800 | 820 | 595 | 572 |
| 900 | 920 | 793 | 778 |
| 1000 | 1020 | 986 | 986 |
| 1200 | 1220 | 1624 | 1624 |
| 1400 | 1220 | 2419 | 2419 |
| 1600 | 1290 | 3444 | 3014 |
| 1800 | 1320 | 4283 | 3833 |
| 2000 | | | |

●Double Socket Bend 45°

| DN | L | Mass ( Kg ) | |
|---|---|---|---|
| | | T-type | K-type |
| 80 | 55 | 7. 7 | 10. 3 |
| 100 | 65 | 10. 1 | 14. 9 |
| 150 | 85 | 17. 4 | 22. 5 |
| 200 | 110 | 27 | 31. 4 |
| 250 | 130 | 38. 5 | 41. 3 |
| 300 | 150 | 53 | 63. 8 |
| 350 | 170 | 70 | 80. 4 |
| 400 | 195 | 89 | 99. 4 |
| 450 | 220 | 123 | 132 |
| 500 | 240 | 129 | 145 |
| 600 | 285 | 202 | 198 |
| 700 | 330 | 282 | 302 |
| 800 | 370 | 378 | 395 |
| 900 | 415 | 496 | 539 |
| 1000 | 460 | 635 | 710 |
| 1200 | 550 | 986 | 1109 |
| 1400 | 515 | 1509 | 1273 |
| 1600 | 565 | 2117 | 1740 |
| 1800 | 610 | 2615 | 2296 |
| 2000 | 660 | | 2970 |

●Double Socket Bend 22.5°

| DN | L | Mass ( Kg ) | |
|---|---|---|---|
| | | T-type | K-type |
| 80 | 40 | 7. 3 | 9. 9 |
| 100 | 40 | 9. 3 | 14. 1 |
| 150 | 55 | 15. 9 | 21 |
| 200 | 65 | 24 | 28. 4 |
| 250 | 75 | 33. 5 | 36. 3 |
| 300 | 85 | 44. 5 | 55. 3 |
| 350 | 95 | 58 | 68. 4 |
| 400 | 110 | 74 | 84. 4 |
| 450 | 120 | 102 | 110 |
| 500 | 130 | 111 | 117 |
| 600 | 150 | 157 | 154 |
| 700 | 175 | 217 | 240 |
| 800 | 195 | 287 | 308 |
| 900 | 220 | 373 | 417 |
| 1000 | 240 | 470 | 550 |
| 1200 | 285 | 851 | 689 |
| 1400 | 260 | 1241 | 857 |
| 1600 | 280 | 1628 | 1198 |
| 1800 | 305 | 2037 | 1588 |
| 2000 | 330 | | 2144 |

●Double Socket Bend 11.25°

| DN | L | Mass ( Kg ) | |
|---|---|---|---|
| | | T-type | K-type |
| 80 | 30 | 7. 1 | 9. 6 |
| 100 | 30 | 8. 9 | 13. 7 |
| 150 | 35 | 14. 8 | 17. 3 |
| 200 | 40 | 22 | 26. 4 |
| 250 | 50 | 30. 5 | 33. 3 |
| 300 | 55 | 40. 5 | 51. 3 |
| 350 | 60 | 52 | 62. 4 |
| 400 | 65 | 65 | 75. 4 |
| 450 | 70 | 91. 9 | 100 |
| 500 | 75 | 96 | 102 |
| 600 | 85 | 134 | 130 |
| 700 | 95 | 181 | 208 |
| 800 | 110 | 239 | 263 |
| 900 | 120 | 305 | 359 |
| 1000 | 130 | 381 | 473 |
| 1200 | 150 | 724 | 541 |
| 1400 | 130 | 1047 | 672 |
| 1600 | 140 | 1376 | 1007 |
| 1800 | 155 | 1704 | 1331 |
| 2000 | 165 | | 1702 |

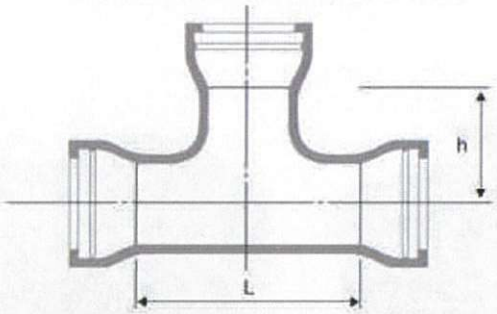


## ● All Socket Tee

| Body DN | Branch dn | L | h | Mass (Kg) T-type | Mass (Kg) K-type |
|---|---|---|---|---|---|
| 80 | 80 | 170 | 85 | 12.4 | 17.7 |
| 100 | 80 | 170 | 95 | 14.8 | 21.5 |
| | 100 | 190 | 95 | 16.1 | 23.2 |
| 150 | 80 | 170 | 120 | 21.5 | 29.2 |
| | 100 | 195 | 120 | 23.5 | 31 |
| | 150 | 255 | 125 | 28 | 35.6 |
| 200 | 80 | 175 | 145 | 30 | 37.9 |
| | 100 | 200 | 145 | 32 | 38.8 |
| | 150 | 255 | 150 | 37 | 44 |
| | 200 | 315 | 155 | 43 | 49.6 |
| 250 | 80 | 175 | 165 | 40 | 48.3 |
| | 100 | 200 | 165 | 42.7 | 47.9 |
| | 150 | 260 | 175 | 51.1 | 56.4 |
| | 200 | 315 | 180 | 55.9 | 60.9 |
| | 250 | 375 | 185 | 63.2 | 67.4 |
| 300 | 80 | 180 | 190 | 51.5 | -- |
| | 100 | 200 | 195 | 54.2 | 67.4 |
| | 150 | 260 | 200 | 64.3 | 77.6 |
| | 200 | 320 | 205 | 69.9 | 82.9 |
| | 250 | 375 | 210 | 79.9 | 92.1 |
| | 300 | 435 | 215 | 86.2 | 102 |
| 350 | 80 | 180 | 215 | 63.6 | -- |
| | 100 | 205 | 220 | 67.2 | 80 |
| | 150 | 265 | 225 | 79.6 | 92.6 |
| | 200 | 320 | 230 | 84.9 | 97.5 |
| | 250 | 380 | 235 | 96.9 | 109 |
| | 300 | 435 | 240 | 106 | 122 |
| | 350 | 495 | 245 | 116 | 131 |
| 400 | 80 | 185 | 240 | 76.1 | -- |
| | 100 | 210 | 245 | 82.2 | 95 |
| | 150 | 265 | 240 | 96.7 | 110 |
| | 200 | 325 | 255 | 102 | 115 |
| | 250 | 380 | 260 | 116 | 128 |
| | 300 | 440 | 265 | 126 | 142 |
| | 350 | 500 | 270 | 137 | 152 |
| | 400 | 555 | 275 | 150 | 166 |

| Body DN | Branch dn | L | h | Mass (Kg) T-type | Mass (Kg) K-type |
|---|---|---|---|---|---|
| 450 | 80 | 185 | 265 | 101 | -- |
| | 100 | 210 | 270 | 106 | 116 |
| | 150 | 270 | 275 | 116 | 126 |
| | 200 | 325 | 280 | 127 | 137 |
| | 250 | 385 | 285 | 138 | 147 |
| | 300 | 445 | 290 | 149 | 163 |
| | 350 | 500 | 295 | 161 | 175 |
| | 400 | 560 | 300 | 173 | 186 |
| | 450 | 615 | 305 | 186 | 198 |
| 500 | 80 | 190 | 290 | 110 | -- |
| | 100 | 215 | 295 | 115 | 123 |
| | 150 | 270 | 300 | 137 | 145 |
| | 200 | 330 | 305 | 141 | 149 |
| | 250 | 390 | 310 | 161 | 168 |
| | 300 | 445 | 315 | 174 | 185 |
| | 350 | 505 | 320 | 187 | 198 |
| | 400 | 560 | 325 | 199 | 210 |
| | 450 | 620 | 330 | 214 | 224 |
| | 500 | 680 | 340 | 234 | 242 |
| 600 | 80 | 195 | 340 | 165 | -- |
| | 100 | 220 | 345 | 169 | 168 |
| | 150 | 280 | 350 | 185 | 184 |
| | 200 | 335 | 355 | 188 | 187 |
| | 250 | 395 | 360 | 215 | 213 |
| | 300 | 450 | 365 | 231 | 233 |
| | 350 | 510 | 370 | 246 | 248 |
| | 400 | 570 | 375 | 258 | 260 |
| | 450 | 625 | 380 | 280 | 281 |
| | 500 | 685 | 390 | 296 | 296 |
| | 600 | 800 | 400 | 343 | 338 |
| 700 | 80 | 205 | 395 | 217 | 207 |
| | 100 | 230 | 395 | 224 | 215 |
| | 150 | 285 | 400 | 241 | 232 |
| | 200 | 345 | 405 | 259 | 250 |
| | 250 | 400 | 410 | 277 | 267 |
| | 300 | 460 | 420 | 297 | 290 |

| Body DN | Branch dn | L | h | Mass (Kg) T-type | Mass (Kg) K-type |
|---|---|---|---|---|---|
| 700 | 350 | 520 | 425 | 317 | 310 |
| | 400 | 575 | 430 | 337 | 329 |
| | 450 | 635 | 435 | 361 | 350 |
| | 500 | 690 | 440 | 380 | 370 |
| | 600 | 810 | 450 | 430 | 416 |
| | 700 | 925 | 460 | 486 | 470 |
| 800 | 80 | 210 | 445 | 278 | 254 |
| | 100 | 235 | 445 | 287 | 264 |
| | 150 | 290 | 450 | 307 | 284 |
| | 200 | 350 | 455 | 330 | 305 |
| | 250 | 410 | 460 | 352 | 328 |
| | 300 | 465 | 470 | 374 | 353 |
| | 350 | 525 | 475 | 398 | 376 |
| | 400 | 580 | 480 | 420 | 398 |
| | 450 | 640 | 485 | 448 | 422 |
| | 500 | 700 | 490 | 472 | 447 |
| | 600 | 815 | 500 | 526 | 497 |
| | 700 | 930 | 510 | 586 | 556 |
| | 800 | 1045 | 525 | 655 | 618 |
| 900 | 80 | 215 | 495 | 349 | 322 |
| | 100 | 240 | 495 | 360 | 333 |
| | 150 | 300 | 500 | 386 | 359 |
| | 200 | 355 | 505 | 410 | 382 |
| | 250 | 415 | 510 | 437 | 408 |
| | 300 | 470 | 515 | 462 | 438 |
| | 350 | 530 | 525 | 490 | 464 |
| | 400 | 590 | 530 | 518 | 491 |
| | 450 | 645 | 535 | 547 | 518 |
| | 500 | 705 | 540 | 574 | 546 |
| | 600 | 820 | 550 | 635 | 602 |
| | 700 | 935 | 560 | 700 | 667 |
| | 800 | 1050 | 570 | 774 | 733 |
| | 900 | 1170 | 585 | 858 | 815 |
| 1000 | 80 | 225 | 545 | 433 | 434 |
| | 100 | 245 | 545 | 443 | 445 |
| | 150 | 305 | 550 | 474 | 475 |




## ● All Socket Tee

| Body DN | Branch dn | L | h | Mass (Kg) T-type | Mass (Kg) K-type |
|---|---|---|---|---|---|
| 1000 | 200 | 360 | 555 | 502 | 503 |
| | 250 | 420 | 560 | 533 | 533 |
| | 300 | 480 | 570 | 564 | 568 |
| | 350 | 535 | 575 | 594 | 597 |
| | 400 | 595 | 580 | 626 | 628 |
| | 450 | 650 | 585 | 659 | 658 |
| | 500 | 710 | 590 | 690 | 690 |
| | 600 | 825 | 600 | 758 | 754 |
| | 700 | 940 | 610 | 831 | 825 |
| | 800 | 4060 | 625 | 913 | 901 |
| | 900 | 1175 | 635 | 1000 | 985 |
| | 1000 | 1290 | 645 | 1096 | 1096 |
| 1200 | 80 | 235 | 645 | 631 | 632 |
| | 100 | 260 | 645 | 648 | 649 |
| | 150 | 315 | 650 | 685 | 686 |
| | 200 | 375 | 655 | 725 | 726 |
| | 250 | 430 | 660 | 766 | 766 |
| | 300 | 490 | 670 | 816 | 819 |
| | 350 | 550 | 675 | 845 | 849 |
| | 400 | 605 | 680 | 884 | 886 |
| | 450 | 665 | 685 | 929 | 928 |
| | 500 | 720 | 690 | 966 | 966 |
| | 600 | 840 | 700 | 1054 | 1050 |
| | 700 | 955 | 710 | 1143 | 1138 |
| | 800 | 1070 | 725 | 1239 | 1226 |
| | 900 | 1185 | 735 | 1339 | 1325 |
| | 1000 | 1300 | 745 | 1447 | 1447 |
| | 1200 | 1535 | 765 | 1697 | 1697 |
| 1400 | 80 | 250 | 745 | 988.8 | 698 |
| | 100 | 270 | 745 | 1006 | 715.9 |
| | 150 | 330 | 750 | 1058 | 767.5 |
| | 200 | 385 | 755 | 1110 | 818.8 |
| | 250 | 445 | 760 | 1153 | 861.5 |
| | 300 | 500 | 770 | 1209 | 918.9 |

| Body DN | Branch dn | L | h | Mass (Kg) T-type | Mass (Kg) K-type |
|---|---|---|---|---|---|
| 1400 | 350 | 560 | 775 | 1257 | 969.1 |
| | 400 | 620 | 780 | 1307 | 1021 |
| | 450 | 675 | 785 | 1357 | 1074 |
| | 500 | 735 | 790 | 1402 | 1117 |
| | 600 | 850 | 800 | 1507 | 1221 |
| | 700 | 965 | 810 | 1627 | 1330 |
| | 800 | 1080 | 825 | 1737 | 1431 |
| | 900 | 1200 | 835 | 1861 | 1550 |
| | 1000 | 1315 | 845 | 1984 | 1670 |
| | 1200 | 1545 | 865 | 2279 | 1930 |
| | 1400 | 1780 | 890 | 2648 | 2210 |
| 1600 | 80 | 260 | 845 | | 1032 |
| | 100 | 280 | 845 | | 1054 |
| | 150 | 340 | 850 | | 1119 |
| | 200 | 400 | 855 | 1551 | 1122 |
| | 250 | 455 | 860 | 1616 | 1186 |
| | 300 | 515 | 870 | 1674 | 1246 |
| | 350 | 570 | 875 | | 1371 |
| | 400 | 630 | 880 | 1797 | 1373 |
| | 450 | 690 | 885 | | 1500 |
| | 500 | 745 | 890 | 1946 | 1523 |
| | 600 | 860 | 900 | 2044 | 1620 |
| | 700 | 980 | 910 | | 1819 |
| | 800 | 1095 | 925 | 2318 | 1875 |
| | 900 | 1210 | 935 | | 2086 |
| | 1000 | 1325 | 945 | 2618 | 2167 |
| | 1200 | 1560 | 965 | 2942 | 2456 |
| | 1400 | 1790 | 990 | 3341 | 2764 |
| | 1600 | 2020 | 1010 | 3800 | 3155 |
| 1800 | 80 | 270 | 945 | | 1340 |
| | 100 | 295 | 945 | | 1373 |
| | 150 | 350 | 950 | | 1446 |
| | 200 | 410 | 955 | 1897 | 1449 |
| | 250 | 470 | 960 | 1980 | 1531 |

| Body DN | Branch dn | L | h | Mass (Kg) T-type | Mass (Kg) K-type |
|---|---|---|---|---|---|
| 1800 | 300 | 525 | 970 | 2063 | 1680 |
| | 350 | 585 | 975 | | 1759 |
| | 400 | 640 | 980 | 2208 | 1831 |
| | 450 | 700 | 985 | | 1911 |
| | 500 | 760 | 990 | 2353 | 1989 |
| | 600 | 875 | 1000 | 2526 | 2139 |
| | 700 | 990 | 1010 | | 2295 |
| | 800 | 1105 | 1025 | 2835 | 2373 |
| | 900 | 1220 | 1035 | | 2612 |
| | 1000 | 1340 | 1045 | 3173 | 2703 |
| | 1200 | 1570 | 1065 | 3543 | 3037 |
| | 1400 | 1800 | 1090 | 3983 | 3387 |
| | 1600 | 2035 | 1110 | 4473 | 3809 |
| | 1800 | 2265 | 1135 | 4958 | 4285 |
| 2000 | 80 | 280 | 1045 | | 1710 |
| | 100 | 305 | 1045 | | 1744 |
| | 150 | 365 | 1050 | | 1838 |
| | 200 | 420 | 1055 | / | 1924 |
| | 250 | 480 | 1060 | / | 2020 |
| | 300 | 540 | 1070 | / | 2117 |
| | 350 | 600 | 1075 | | 2204 |
| | 400 | 655 | 1080 | / | 2205 |
| | 450 | 710 | 1085 | | 2386 |
| | 500 | 770 | 1090 | / | 2479 |
| | 600 | 885 | 1100 | / | 2660 |
| | 700 | 1000 | 1110 | | 2845 |
| | 800 | 1120 | 1125 | / | 3035 |
| | 900 | 1235 | 1135 | | 3226 |
| | 1000 | 1350 | 1145 | / | 3437 |
| | 1200 | 1580 | 1165 | / | 3846 |
| | 1400 | 1815 | 1190 | / | 4244 |
| | 1600 | 2045 | 1210 | / | 4695 |
| | 1800 | 2280 | 1235 | / | 5218 |
| | 2000 | 2510 | 1255 | / | 5787 |

| Body | Branch | L | h | Mass ( Kg ) | | | | | |
|---|---|---|---|---|---|---|---|---|---|
| | | | | T-type | | | K-type | | |
| DN | dn | | | PN10 | PN16 | PN25 | PN10 | PN16 | PN25 |
| 80 | 80 | 170 | 160 | 13.5 | 13.5 | 13.5 | — | — | — |
| 100 | 80 | 170 | 175 | 15.8 | 15.8 | 15.8 | 20 | 20 | 20 |
| | 100 | 190 | 180 | 17.2 | 17.2 | 17.7 | 22 | 22 | 22 |
| 150 | 80 | 170 | 205 | 23 | 23 | 23 | 28 | 28 | 28 |
| | 100 | 195 | 210 | 24.5 | 24.5 | 25 | 29.5 | 29.5 | 29.5 |
| | 150 | 255 | 220 | 29.5 | 29.5 | 30.5 | 34.5 | 34.5 | 34.5 |
| 200 | 80 | 175 | 235 | 31.5 | 31.5 | 31.5 | 36 | 36 | 36 |
| | 100 | 200 | 240 | 33.5 | 33.5 | 34 | 38 | 38 | 38 |
| | 150 | 255 | 250 | 39 | 39 | 40 | 43.4 | 43.4 | 43.4 |
| | 200 | 315 | 260 | 45.6 | 46 | 47.5 | 50 | 50.4 | 52 |
| 250 | 80 | 175 | 265 | 44 | 44 | 44 | 46.6 | 45.6 | 45.6 |
| | 100 | 200 | 270 | 43.5 | 43.5 | 44 | 46 | 46 | 46.5 |
| | 150 | 260 | 280 | 56.6 | 56.6 | 57.6 | 59 | 59 | 60 |
| | 200 | 315 | 290 | 57 | 57 | 59 | 60 | 60 | 62 |
| | 250 | 375 | 300 | 65 | 66 | 69 | 67.6 | 68.6 | 71.6 |
| 300 | 100 | 200 | 300 | 55 | 55 | 56 | 66 | 66 | 67 |
| | 150 | 260 | 310 | 68 | 68 | 69 | 79 | 79 | 80 |
| | 200 | 320 | 320 | 71 | 70 | 73 | 82 | 80 | 84 |
| | 250 | 375 | 330 | 83 | 81 | 85 | 94 | 91 | 96 |
| | 300 | 435 | 340 | 89 | 91 | 95 | 100 | 102 | 106 |
| 350 | 100 | 205 | 330 | 68 | 68 | 68 | 78 | 78 | 78 |
| | 150 | 265 | 340 | 82.3 | 81.3 | 82.3 | 93 | 93 | 93 |
| | 200 | 320 | 350 | 86 | 86 | 88 | 96 | 96 | 98 |
| | 250 | 380 | 360 | 103 | 114 | 125 | 114 | 124 | 135 |
| | 300 | 435 | 370 | 111 | 118 | 129 | 122 | 128 | 139 |
| | 350 | 495 | 380 | 117 | 120 | 129 | 127 | 130 | 139 |
| 400 | 100 | 210 | 360 | 83 | 83 | 83 | 93 | 93 | 93 |
| | 150 | 265 | 370 | 98 | 98 | 98 | 108 | 108 | 108 |
| | 200 | 325 | 380 | 103 | 102 | 104 | 113 | 113 | 114 |
| | 250 | 380 | 390 | 119 | 118 | 122 | 127 | 128 | 132 |
| | 300 | 440 | 400 | 131 | 131 | 137 | 141 | 141 | 147 |
| | 350 | 500 | 410 | 143 | 146 | 153 | 153 | 156 | 163 |
| | 400 | 555 | 420 | 150 | 156 | 167 | 160 | 166 | 167 |
| 450 | 100 | 210 | 390 | 107 | 107 | 108 | 115 | 115 | 116 |
| | 150 | 270 | 400 | 119 | 119 | 120 | 127 | 127 | 128 |
| | 200 | 325 | 410 | 130 | 129 | 132 | 138 | 138 | 140 |
| | 250 | 385 | 420 | 141 | 140 | 144 | 149 | 149 | 153 |
| | 300 | 445 | 430 | 154 | 154 | 160 | 162 | 162 | 168 |
| | 350 | 500 | 440 | 166 | 169 | 178 | 174 | 177 | 186 |
| | 400 | 560 | 450 | 179 | 185 | 196 | 188 | 193 | 204 |
| | 450 | 615 | 460 | 191 | 200 | 216 | 200 | 209 | 224 |
| 500 | 100 | 215 | 420 | 116 | 116 | 117 | 122 | 122 | 122 |
| | 150 | 270 | 430 | 137 | 137 | 139 | 145 | 145 | 145 |

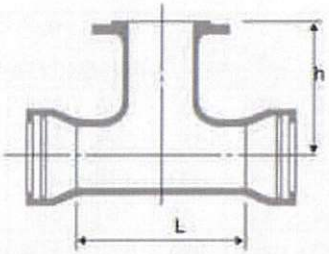


● Double Socket Tee with Flanged Branch

| Body | Branch | L | h | Mass ( Kg ) | | | | | |
|---|---|---|---|---|---|---|---|---|---|
| | | | | T-type | | | K-type | | |
| DN | dn | | | PN10 | PN16 | PN25 | PN10 | PN16 | PN25 |
| 500 | 200 | 330 | 440 | 141 | 141 | 143 | 146 | 147 | 149 |
| | 250 | 390 | 450 | 165 | 165 | 149 | 172 | 171 | 177 |
| | 300 | 445 | 460 | 179 | 179 | 184 | 182 | 185 | 190 |
| | 350 | 505 | 470 | 193 | 195 | 203 | 198 | 201 | 210 |
| | 400 | 565 | 480 | 199 | 205 | 216 | 205 | 211 | 222 |
| | 450 | 620 | 490 | 220 | 228 | 244 | 226 | 235 | 250 |
| | 500 | 680 | 500 | 232 | 247 | 259 | 238 | 253 | 265 |
| 600 | 100 | 220 | 480 | 171 | 171 | 171 | 167 | 167 | 168 |
| | 150 | 280 | 490 | 187 | 187 | 188 | 182 | 182 | 183 |
| | 200 | 340 | 500 | 189 | 189 | 191 | 185 | 185 | 188 |
| | 250 | 395 | 510 | 219 | 218 | 222 | 215 | 215 | 218 |
| | 300 | 450 | 520 | 235 | 235 | 240 | 231 | 231 | 236 |
| | 350 | 510 | 530 | 252 | 255 | 263 | 247 | 251 | 260 |
| | 400 | 570 | 540 | 258 | 263 | 274 | 254 | 259 | 270 |
| | 450 | 625 | 550 | 285 | 293 | 309 | 281 | 289 | 305 |
| | 500 | 685 | 560 | 304 | 309 | 331 | 301 | 305 | 327 |
| | 600 | 800 | 580 | 340 | 366 | 380 | 336 | 363 | 376 |
| 700 | 100 | 230 | 510 | 242 | 242 | 243 | 243 | 243 | 244 |
| | 150 | 285 | 515 | 246 | 246 | 247 | 246 | 246 | 247 |
| | 200 | 345 | 525 | 242 | 242 | 251 | 249 | 249 | 251 |
| | 300 | 460 | 540 | 300 | 300 | 306 | 301 | 301 | 307 |
| | 350 | 520 | 545 | 312 | 315 | 324 | 313 | 316 | 325 |
| | 400 | 575 | 555 | 320 | 325 | 344 | 329 | 334 | 345 |
| | 450 | 635 | 560 | 369 | 378 | 391 | 370 | 379 | 392 |
| | 500 | 690 | 570 | 391 | 406 | 418 | 392 | 407 | 419 |
| | 600 | 810 | 585 | 421 | 445 | 456 | 422 | 445 | 457 |
| | 700 | 925 | 600 | 460 | 475 | 525 | 476 | 488 | 525 |
| 800 | 100 | 235 | 570 | 304 | 304 | 305 | 295 | 295 | 295 |
| | 150 | 290 | 580 | 308 | 308 | 309 | 298 | 298 | 299 |
| | 200 | 350 | 585 | 306 | 306 | 313 | 302 | 301 | 303 |
| | 250 | 410 | 590 | 351 | 351 | 355 | 342 | 341 | 346 |
| | 300 | 465 | 600 | 371 | 371 | 377 | 362 | 362 | 368 |
| | 400 | 580 | 615 | 398 | 403 | 421 | 396 | 401 | 412 |
| | 500 | 700 | 630 | 522 | 537 | 549 | 513 | 528 | 540 |
| | 600 | 815 | 645 | 579 | 605 | 624 | 579 | 603 | 614 |

| Body | Branch | L | h | T-type Mass ( Kg ) | | | K-type Mass ( Kg ) | | |
|---|---|---|---|---|---|---|---|---|---|
| DN | dn | | | PN10 | PN16 | PN25 | PN10 | PN16 | PN25 |
| 800 | 700 | 930 | 660 | 620 | 635 | 669 | 611 | 626 | 660 |
| | 800 | 1045 | 675 | 623 | 642 | 708 | 631 | 646 | 699 |
| 900 | 100 | 240 | 630 | 378 | 378 | 378 | 365 | 365 | 366 |
| | 150 | 300 | 635 | 381 | 381 | 382 | 368 | 368 | 369 |
| | 200 | 355 | 645 | 379 | 379 | 386 | 371 | 371 | 373 |
| | 300 | 470 | 660 | 455 | 455 | 461 | 442 | 442 | 448 |
| | 400 | 590 | 675 | 490 | 495 | 513 | 484 | 488 | 499 |
| | 500 | 705 | 690 | 666 | 681 | 693 | 653 | 668 | 690 |
| | 600 | 820 | 705 | 748 | 774 | 784 | 745 | 769 | 783 |
| | 700 | 935 | 720 | 788 | 803 | 837 | 775 | 790 | 824 |
| | 800 | 1050 | 735 | 808 | 823 | 876 | 795 | 810 | 863 |
| | 900 | 1170 | 750 | 814 | 838 | 920 | 822 | 841 | 907 |
| 1000 | 100 | 245 | 690 | 461 | 461 | 462 | 461 | 461 | 462 |
| | 150 | 305 | 695 | 464 | 464 | 465 | 464 | 464 | 465 |
| | 200 | 360 | 705 | 462 | 462 | 469 | 467 | 467 | 469 |
| | 250 | 420 | 710 | 521 | 521 | 525 | 521 | 521 | 525 |
| | 300 | 480 | 720 | 552 | 552 | 558 | 552 | 552 | 558 |
| | 400 | 595 | 735 | 591 | 596 | 614 | 598 | 603 | 614 |
| | 500 | 710 | 750 | 852 | 867 | 879 | 852 | 867 | 879 |
| | 600 | 825 | 765 | 947 | 973 | 994 | 958 | 982 | 994 |
| | 700 | 940 | 780 | 985 | 1000 | 1032 | 985 | 1000 | 1032 |
| | 800 | 1060 | 795 | 1006 | 1021 | 1074 | 1006 | 1021 | 1074 |
| | 900 | 1175 | 810 | 1052 | 1076 | 1137 | 1052 | 1076 | 1137 |
| | 1000 | 1290 | 825 | 1044 | 1086 | 1192 | 1072 | 1106 | 1192 |
| 1200 | 100 | 260 | 810 | 676 | 676 | 676 | 676 | 676 | 676 |
| | 200 | 375 | 825 | 682 | 682 | 684 | 682 | 682 | 684 |
| | 300 | 490 | 840 | 769 | 769 | 775 | 769 | 769 | 775 |
| | 400 | 605 | 855 | 852 | 856 | 867 | 852 | 856 | 867 |
| | 500 | 720 | 870 | 968 | 973 | 995 | 968 | 973 | 995 |
| | 600 | 840 | 885 | 1000 | 1027 | 1067 | 1031 | 1055 | 1067 |
| | 700 | 955 | 900 | 1169 | 1184 | 1218 | 1169 | 1184 | 1218 |
| | 800 | 1070 | 915 | 1190 | 1210 | 1295 | 1227 | 1242 | 1295 |
| | 900 | 1185 | 930 | 1367 | 1427 | 1452 | 1367 | 1427 | 1452 |
| | 1000 | 1300 | 945 | 1436 | 1470 | 1556 | 1436 | 1470 | 1556 |
| | 1200 | 1535 | 975 | 1682 | 1736 | 1846 | 1682 | 1736 | 1846 |
| 1400 | 100 | 450 | 905 | 1120 | 1120 | 1120 | 1120 | 1120 | 1120 |
| | 200 | 565 | 920 | 1240 | 1240 | 1242 | 948 | 948 | 950 |
| | 300 | 680 | 935 | 1338 | 1338 | 1343 | 1046 | 1046 | 1051 |
| | 400 | 800 | 950 | 1442 | 1449 | 1458 | 1150 | 1156 | 1166 |
| | 500 | 915 | 965 | 1540 | 1554 | 1564 | 1247 | 1262 | 1272 |
| | 600 | 1030 | 980 | 1681 | 1706 | 1718 | 1389 | 1414 | 1426 |
| | 800 | 1260 | 1010 | 1908 | 1926 | 1972 | 1616 | 1634 | 1680 |
| | 1000 | 1495 | 1040 | 2155 | 2193 | 2266 | 1863 | 1901 | 1973 |
| | 1200 | 1725 | 1070 | 2398 | 2457 | 2547 | 2106 | 2164 | 2255 |
| | 1400 | 1960 | 1100 | 2686 | 2747 | 2887 | 2394 | 2455 | 2595 |

| Body | Branch | L | h | T-type Mass ( Kg ) | | | K-type Mass ( Kg ) | | |
|---|---|---|---|---|---|---|---|---|---|
| DN | dn | | | PN10 | PN16 | PN25 | PN10 | PN16 | PN25 |
| 1600 | 200 | 580 | 1030 | 1748 | 1748 | 1750 | 1318 | 1318 | 1320 |
| | 250 | 635 | 1040 | 1810 | 1809 | 1813 | 1380 | 1379 | 1383 |
| | 300 | 695 | 1045 | 1876 | 1876 | 1881 | 1446 | 1446 | 1451 |
| | 400 | 810 | 1060 | 2002 | 2008 | 2017 | 1572 | 1578 | 1587 |
| | 500 | 925 | 1075 | 2129 | 2143 | 2154 | 1699 | 1713 | 1724 |
| | 600 | 1040 | 1090 | 2260 | 2285 | 2297 | 1908 | 1934 | 1967 |
| | 800 | 1275 | 1120 | 2811 | 2829 | 2875 | 2381 | 2399 | 2445 |
| | 1000 | 1505 | 1150 | 2824 | 2862 | 2935 | 2480 | 2522 | 2594 |
| | 1200 | 1740 | 1180 | 3146 | 3205 | 3295 | 2799 | 2863 | 2954 |
| | 1400 | 1970 | 1210 | 3478 | 3539 | 3679 | 3048 | 3109 | 3249 |
| | 1600 | 2200 | 1240 | 3883 | 3975 | 4135 | 3453 | 3545 | 3705 |
| 1800 | 200 | 595 | 1150 | 2146 | 2146 | 2148 | 1697 | 1697 | 1699 |
| | 250 | 650 | 1150 | 2220 | 2220 | 2224 | 1771 | 1771 | 1774 |
| | 300 | 705 | 1155 | 2295 | 2294 | 2300 | 1846 | 1845 | 1850 |
| | 400 | 820 | 1170 | 2448 | 2454 | 2463 | 1998 | 2005 | 2014 |
| | 500 | 940 | 1185 | 2608 | 2623 | 2633 | 2159 | 2174 | 2184 |
| | 600 | 1055 | 1200 | 2766 | 2791 | 2803 | 2414 | 2440 | 2453 |
| | 800 | 1285 | 1230 | 3092 | 3109 | 3155 | 2748 | 2767 | 2813 |
| | 1000 | 1520 | 1260 | 3434 | 3472 | 3545 | 3095 | 3137 | 3210 |
| | 1200 | 1750 | 1290 | 3798 | 3856 | 3947 | 3460 | 3524 | 3614 |
| | 1400 | 1980 | 1320 | 4173 | 4233 | 4373 | 3723 | 3784 | 3924 |
| | 1600 | 2215 | 1350 | 4617 | 4710 | 4870 | 4168 | 4260 | 4421 |
| | 1800 | 2445 | 1380 | 5075 | 5188 | 5405 | 4626 | 4739 | 4956 |
| 2000 | 200 | 600 | 1250 | / | / | / | 2117 | 2117 | 2119 |
| | 250 | 660 | 1260 | / | / | / | 2214 | 2214 | 2218 |
| | 300 | 720 | 1270 | / | / | / | 2312 | 2311 | 2317 |
| | 400 | 835 | 1290 | / | / | / | 2496 | 2502 | 2511 |
| | 500 | 950 | 1305 | / | / | / | 2681 | 2695 | 2705 |
| | 600 | 1065 | 1310 | / | / | / | 2988 | 3015 | 3028 |
| | 800 | 1300 | 1340 | / | / | / | 3231 | 3248 | 3294 |
| | 1000 | 1530 | 1370 | / | / | / | 3790 | 3832 | 3904 |
| | 1200 | 1760 | 1400 | / | / | / | 4014 | 4072 | 4163 |
| | 1400 | 1995 | 1430 | / | / | / | 4645 | 4713 | 4852 |
| | 1600 | 2225 | 1460 | / | / | / | 4892 | 4984 | 5144 |
| | 1800 | 2460 | 1490 | / | / | / | 5367 | 5480 | 5697 |
| | 2000 | 2690 | 1520 | / | / | / | 5999 | 6136 | 6458 |

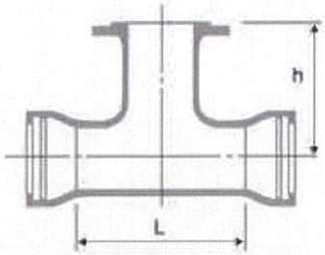


Double Socket Tee with Flanged Branch

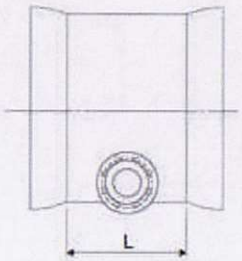


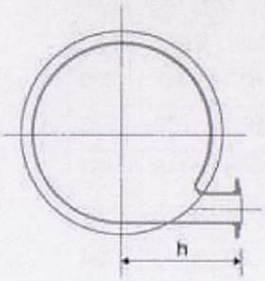


## ● Double Socket Level Invert Tee

| Body | Branch | L | h | T-type Mass ( Kg ) | | | K-type Mass ( Kg ) | | |
|---|---|---|---|---|---|---|---|---|---|
| DN | dn | | | PN10 | PN16 | PN25 | PN10 | PN16 | PN25 |
| 200 | 100 | 200 | 240 | 36.5 | 36.5 | 37 | 41 | 41 | 41.5 |
| | 150 | 250 | 250 | 44 | 44 | 45 | 48.5 | 48.5 | 49.5 |
| 250 | 100 | 200 | 270 | 47.5 | 47.5 | 49 | 51.1 | 51.1 | 52.6 |
| | 150 | 255 | 280 | 62.6 | 62.6 | 63.5 | 66.2 | 66.2 | 67.1 |
| | 200 | 315 | 290 | 65 | 65 | 67 | 68.6 | 68.6 | 70.6 |
| 300 | 100 | 205 | 300 | 59 | 59 | 60.5 | 69.8 | 69.8 | 71.3 |
| | 150 | 260 | 310 | 74 | 74 | 75 | 74.8 | 74.8 | 75.8 |
| | 200 | 320 | 320 | 80 | 79 | 82 | 90.8 | 90.8 | 92.8 |
| 350 | 100 | 205 | 330 | 73 | 73 | 73 | 83.4 | 83.4 | 83.4 |
| | 150 | 265 | 340 | 91.5 | 91.5 | 92 | 102 | 102 | 102 |
| | 200 | 325 | 350 | 96 | 96 | 98 | 106 | 106 | 108 |
| 400 | 100 | 210 | 360 | 89 | 89 | 89 | 99.4 | 99.4 | 99.4 |
| | 150 | 265 | 370 | 101 | 101 | 102 | 111 | 111 | 112 |
| | 200 | 325 | 380 | 115 | 114 | 116 | 125 | 125 | 126 |
| | 250 | 380 | 390 | 134 | 133 | 138 | 144 | 144 | 148 |
| 450 | 100 | 210 | 400 | 114 | 114 | 114 | 121 | 121 | 121 |
| | 150 | 270 | 400 | 130 | 130 | 131 | 137 | 137 | 138 |
| | 200 | 325 | 410 | 142 | 142 | 144 | 149 | 149 | 151 |
| | 250 | 385 | 420 | 155 | 154 | 159 | 162 | 162 | 166 |
| | 300 | 445 | 430 | 174 | 174 | 180 | 181 | 181 | 187 |
| 500 | 100 | 215 | 420 | 124 | 124 | 125 | 130 | 130 | 131 |
| | 150 | 274 | 430 | 149 | 150 | 151 | 155 | 156 | 157 |
| | 200 | 330 | 440 | 158 | 157 | 159 | 164 | 164 | 165 |
| | 250 | 390 | 450 | 182 | 181 | 185 | 188 | 188 | 191 |
| | 300 | 445 | 460 | 201 | 201 | 206 | 207 | 207 | 212 |
| 600 | 100 | 220 | 480 | 186 | 185 | 185 | 184 | 183 | 183 |
| | 150 | 280 | 490 | 199 | 199 | 200 | 197 | 197 | 198 |
| | 200 | 340 | 500 | 205 | 205 | 207 | 203 | 203 | 205 |
| | 250 | 395 | 510 | 239 | 238 | 243 | 237 | 236 | 241 |
| 600 | 300 | 450 | 520 | 257 | 257 | 261 | 255 | 255 | 259 |
| | 350 | 510 | 530 | 283 | 289 | 295 | 281 | 287 | 293 |
| | 400 | 570 | 540 | 294 | 300 | 310 | 292 | 298 | 308 |

| Body | Branch | L | h | T-type Mass ( Kg ) | | | K-type Mass ( Kg ) | | |
|---|---|---|---|---|---|---|---|---|---|
| DN | dn | | | PN10 | PN16 | PN25 | PN10 | PN16 | PN25 |
| 700 | 100 | 230 | 510 | 261 | 261 | 262 | 253 | 253 | 254 |
| | 150 | 285 | 515 | 265 | 265 | 266 | 255 | 255 | 256 |
| | 200 | 345 | 525 | 269 | 269 | 271 | 280 | 280 | 282 |
| | 300 | 460 | 540 | 324 | 324 | 330 | 320 | 319 | 326 |
| 800 | 100 | 235 | 570 | 328 | 328 | 329 | 308 | 308 | 309 |
| | 150 | 290 | 575 | 335 | 335 | 336 | 310 | 310 | 311 |
| | 200 | 350 | 585 | 336 | 336 | 338 | 335 | 335 | 337 |
| | 250 | 410 | 590 | 379 | 379 | 383 | 355 | 354 | 358 |
| | 300 | 465 | 630 | 401 | 401 | 407 | 380 | 379 | 385 |
| 900 | 150 | 300 | 635 | 409 | 409 | 410 | 382 | 382 | 383 |
| | 200 | 355 | 645 | 416 | 416 | 418 | 396 | 396 | 398 |
| | 300 | 470 | 660 | 491 | 491 | 497 | 460 | 459 | 465 |
| | 400 | 590 | 675 | 537 | 542 | 553 | 504 | 508 | 519 |
| 1000 | 100 | 145 | 690 | 449.9 | 449.8 | 450.4 | 407.9 | 407.8 | 408.4 |
| | 150 | 305 | 695 | 476.7 | 476.7 | 477.7 | 434.7 | 434.7 | 435.7 |
| | 200 | 360 | 705 | 504.4 | 504.4 | 506.2 | 462.4 | 462.4 | 462.2 |
| | 300 | 480 | 720 | 569.9 | 569.6 | 574.8 | 527.9 | 527.6 | 532.8 |
| 1200 | 200 | 375 | 825 | 738.1 | 738.1 | 739.9 | 626.1 | 626.1 | 627.9 |
| | 400 | 605 | 855 | 904.5 | 911.0 | 920.2 | 792.5 | 799.0 | 808.2 |
| 1400 | 200 | 565 | 920 | 1256 | 1256 | 1258 | 963.4 | 963.4 | 965.2 |
| | 400 | 800 | 950 | 1463 | 1470 | 1479 | 1171 | 1177 | 1187 |
| | 600 | 1030 | 980 | 1708 | 1733 | 1745 | 1415 | 1440 | 1453 |
| 1600 | 400 | 810 | 1060 | 2029 | 2036 | 2045 | 1599 | 1606 | 1615 |
| 1800 | 400 | 820 | 1170 | 2486 | 2492 | 2501 | 2037 | 2043 | 2052 |
| 2000 | 400 | 835 | 1280 | / | / | / | 2542 | 2548 | 2588 |
| | 600 | 1065 | 1310 | / | / | / | 2988 | 3015 | 3026 |

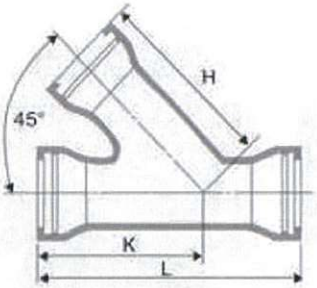


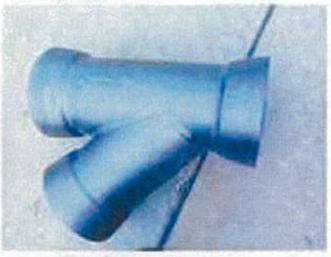

●All Socket 45° Angle Branch

| Body DN | Branch dn | L | K | H | Mass ( Kg ) T-type | Mass ( Kg ) K-type |
|---|---|---|---|---|---|---|
| 80 | 80 | 290 | 215 | 215 | 21.4 | 21.4 |
| 100 | 80 | 290 | 225 | 230 | 25 | 25 |
| | 100 | 320 | 240 | 240 | 26.8 | 26.8 |
| 150 | 80 | 290 | 250 | 265 | 37.1 | 37.1 |
| | 100 | 320 | 265 | 275 | 39.4 | 39.4 |
| | 150 | 390 | 300 | 300 | 46 | 46 |
| 200 | 80 | 290 | 275 | 300 | 52.7 | 52.3 |
| | 100 | 320 | 290 | 310 | 55.3 | 54.9 |
| | 150 | 390 | 325 | 335 | 62.8 | 62.4 |
| | 200 | 460 | 360 | 360 | 71.5 | 70.9 |
| 250 | 80 | 290 | 300 | 335 | 72.5 | 71.7 |
| | 100 | 320 | 315 | 345 | 75.4 | 74.6 |
| | 150 | 390 | 350 | 370 | 83.8 | 83 |
| | 200 | 460 | 385 | 395 | 93.7 | 92.7 |
| | 250 | 530 | 420 | 420 | 104 | 103 |
| 300 | 80 | 290 | 325 | 370 | 96.3 | 96 |
| | 100 | 320 | 340 | 380 | 99.6 | 98.8 |
| | 150 | 390 | 375 | 405 | 109 | 108 |
| | 200 | 460 | 410 | 430 | 120 | 119 |
| | 250 | 530 | 445 | 455 | 132 | 131 |
| | 300 | 600 | 480 | 480 | 145 | 144 |
| 350 | 100 | 380 | 405 | 455 | 126 | 139 |
| | 150 | 450 | 440 | 480 | 136 | 149 |
| | 200 | 520 | 475 | 505 | 146 | 159 |
| | 250 | 690 | 510 | 530 | 158 | 170 |
| | 300 | 660 | 545 | 555 | 171 | 187 |
| | 350 | 730 | 580 | 580 | 186 | 201 |
| 400 | 100 | 380 | 430 | 490 | 159 | 172 |
| | 150 | 450 | 465 | 515 | 170 | 183 |
| | 200 | 520 | 500 | 540 | 182 | 195 |
| | 250 | 590 | 535 | 565 | 195 | 206 |
| | 300 | 660 | 570 | 590 | 209 | 225 |
| | 350 | 730 | 605 | 615 | 225 | 241 |

| Body DN | Branch dn | L | K | H | Mass ( Kg ) T-type | Mass ( Kg ) K-type |
|---|---|---|---|---|---|---|
| 400 | 400 | 800 | 640 | 640 | 242 | 258 |
| 450 | 100 | 380 | 455 | 525 | 198 | 208 |
| | 150 | 450 | 490 | 550 | 210 | 221 |
| | 200 | 520 | 525 | 575 | 223 | 233 |
| | 250 | 590 | 560 | 600 | 237 | 247 |
| | 350 | 730 | 630 | 650 | 270 | 283 |
| | 400 | 800 | 665 | 675 | 288 | 301 |
| | 450 | 870 | 700 | 700 | 307 | 320 |
| 500 | 100 | 380 | 480 | 560 | 243 | 251 |
| | 150 | 450 | 515 | 585 | 256 | 264 |
| | 200 | 520 | 550 | 610 | 269 | 277 |
| | 250 | 590 | 585 | 635 | 286 | 293 |
| | 300 | 660 | 620 | 660 | 303 | 314 |
| | 350 | 730 | 655 | 685 | 321 | 332 |
| | 400 | 800 | 690 | 710 | 340 | 351 |
| | 450 | 870 | 725 | 735 | 361 | 371 |
| | 500 | 940 | 760 | 760 | 383 | 392 |
| 600 | 100 | 380 | 565 | 655 | 347 | 346 |
| | 150 | 450 | 600 | 680 | 364 | 363 |
| | 200 | 520 | 635 | 705 | 381 | 379 |
| | 250 | 590 | 670 | 730 | 399 | 379 |
| | 300 | 660 | 705 | 755 | 418 | 419 |
| | 350 | 730 | 740 | 780 | 439 | 440 |
| | 400 | 800 | 775 | 805 | 461 | 463 |
| | 450 | 870 | 810 | 830 | 485 | 486 |
| | 500 | 940 | 845 | 855 | 511 | 510 |
| | 600 | 1080 | 880 | 880 | 567 | 562 |
| 700 | 700 | 1220 | 1000 | 1000 | 950 | 935 |
| 800 | 800 | 1360 | 1120 | 1120 | 1769 | 1733 |
| 900 | 900 | 1500 | 1240 | 1240 | 1795 | 1753 |
| 1000 | 1000 | 1640 | 1360 | 1360 | 2310 | 2310 |
| 1200 | 1200 | 1780 | 1480 | 1480 | 3015 | 3015 |

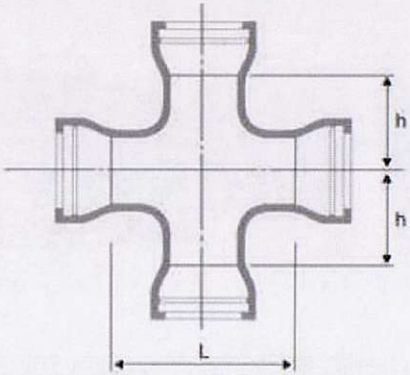



● All Socket Cross

| Body DN | Branch dn | L | h | Mass ( Kg ) T-type | Mass ( Kg ) K-type |
|---|---|---|---|---|---|
| 100 | 100 | 190 | 95 | 19. 8 | 29. 3 |
| 150 | 100 | 195 | 120 | 26. 6 | 36. 4 |
| | 150 | 255 | 125 | 33. 6 | 43. 8 |
| 200 | 100 | 200 | 145 | 34. 2 | 43. 4 |
| | 150 | 255 | 150 | 41. 7 | 51. 2 |
| | 200 | 315 | 155 | 50. 9 | 59. 7 |
| 250 | 100 | 200 | 170 | 44. 9 | 52. 4 |
| | 150 | 260 | 175 | 57. 9 | 65. 8 |
| | 200 | 315 | 180 | 64. 2 | 71. 4 |
| | 250 | 375 | 185 | 75. 1 | 80. 7 |
| 300 | 100 | 205 | 195 | 55. 7 | 71. 2 |
| | 150 | 260 | 200 | 71. 1 | 87 |
| | 200 | 320 | 205 | 77. 6 | 92. 8 |
| | 250 | 380 | 210 | 93. 3 | 107 |
| | 300 | 435 | 220 | 101 | 123 |
| 350 | 200 | 325 | 230 | 91. 7 | 107 |
| | 250 | 380 | 235 | 110 | 123 |
| | 300 | 440 | 245 | 123 | 144 |
| | 350 | 495 | 250 | 137 | 157 |
| 400 | 200 | 325 | 255 | 108 | 122 |
| | 250 | 385 | 260 | 130 | 143 |
| | 300 | 440 | 270 | 142 | 163 |
| | 350 | 500 | 275 | 157 | 178 |
| | 400 | 560 | 280 | 177 | 198 |
| 500 | 250 | 390 | 310 | 174 | 183 |
| | 300 | 450 | 320 | 191 | 208 |
| | 350 | 505 | 325 | 207 | 223 |
| | 400 | 565 | 330 | 223 | 239 |
| | 500 | 680 | 340 | 272 | 284 |
| 600 | 300 | 455 | 370 | 249 | 256 |
| | 350 | 510 | 375 | 267 | 274 |

| Body DN | Branch dn | L | h | Mass ( Kg ) T-type | Mass ( Kg ) K-type |
|---|---|---|---|---|---|
| 600 | 400 | 570 | 380 | 278 | 284 |
| | 500 | 685 | 390 | 330 | 332 |
| | 600 | 800 | 400 | 399 | 392 |
| 700 | 350 | 520 | 425 | 413 | 410 |
| | 400 | 575 | 430 | 447 | 441 |
| | 500 | 690 | 440 | 520 | 510 |
| | 600 | 810 | 450 | 607 | 589 |
| | 700 | 925 | 460 | 712 | 691 |
| 800 | 400 | 580 | 480 | 548 | 527 |
| | 500 | 700 | 490 | 632 | 608 |
| | 600 | 815 | 500 | 725 | 692 |
| | 700 | 930 | 510 | 831 | 796 |
| | 800 | 1045 | 525 | 963 | 914 |
| 900 | 500 | 705 | 540 | 757 | 729 |
| | 600 | 802 | 550 | 859 | 823 |
| | 700 | 935 | 560 | 969 | 930 |
| | 800 | 1050 | 575 | 1105 | 1052 |
| | 900 | 1170 | 585 | 1262 | 1205 |
| 1000 | 600 | 825 | 600 | 1011 | 1003 |
| | 700 | 940 | 610 | 1130 | 1120 |
| | 800 | 1060 | 625 | 1276 | 1251 |
| | 900 | 1175 | 635 | 1432 | 1404 |
| | 1000 | 1290 | 645 | 1612 | 1612 |
| 1200 | 800 | 1070 | 725 | 1677 | 1652 |
| | 900 | 1185 | 735 | 1847 | 1818 |
| | 1000 | 1300 | 745 | 2034 | 2034 |
| | 1200 | 1535 | 765 | 2497 | 2497 |
| 1400 | 900 | 1200 | 835 | 2261 | 2232 |
| | 1000 | 1315 | 845 | 2468 | 2468 |
| | 1200 | 1545 | 865 | 2940 | 2940 |
| | 1400 | 1780 | 890 | 3446 | 3446 |

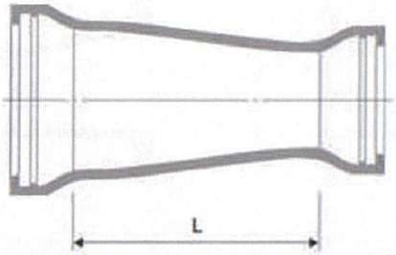


## ● Double Socket Taper/Reducer

| DN | dn | L | Mass ( Kg ) | |
|---|---|---|---|---|
| | | | T-type | K-type |
| 100 | 80 | 90 | 8. 5 | 12. 3 |
| 150 | 80 | 190 | 13. 5 | 17. 5 |
| | 100 | 150 | 13. 8 | 18. 7 |
| 200 | 80 | 290 | 20. 5 | 23 |
| | 100 | 250 | 20. 5 | 25. 2 |
| | 150 | 150 | 21 | 26 |
| 250 | 80 | 390 | 28. 5 | 31 |
| | 100 | 300 | 28. 5 | 32. 2 |
| | 150 | 250 | 29 | 33. 2 |
| | 200 | 150 | 29 | 33 |
| 300 | 80 | 490 | 39 | 42.9 |
| | 100 | 450 | 39 | 46. 9 |
| | 150 | 350 | 39. 5 | 46. 9 |
| | 200 | 250 | 39. 5 | 46. 9 |
| | 250 | 150 | 38. 5 | 45. 7 |
| 350 | 80 | 600 | 51.5 | 57.9 |
| | 100 | 560 | 50 | 58. 2 |
| | 150 | 460 | 52 | 60. 1 |
| | 200 | 360 | 52 | 60. 1 |
| | 250 | 260 | 51 | 62. 1 |
| | 300 | 160 | 49. 5 | 64. 9 |
| 400 | 80 | 700 | 64 | 71.4 |
| | 100 | 660 | 65 | 72. 3 |
| | 150 | 560 | 66. 5 | 78. 4 |
| | 200 | 460 | 67 | 78. 3 |
| | 250 | 360 | 66 | 77. 2 |
| | 300 | 260 | 64 | 80. 1 |
| | 350 | 160 | 62 | 78 |
| 450 | 80 | 760 | 87. 9 | 88.5 |
| | 100 | 760 | 87. 9 | 94. 2 |
| | 150 | 660 | 88. 9 | 95. 3 |
| | 200 | 560 | 88. 9 | 95. 3 |
| | 250 | 460 | 89. 2 | 94. 2 |
| | 300 | 360 | 88. 1 | 97. 1 |
| | 350 | 260 | 86 | 95 |

| DN | dn | L | Mass ( Kg ) | |
|---|---|---|---|---|
| | | | T-type | K-type |
| 450 | 400 | 160 | 83. 1 | 92 |
| 500 | 80 | 900 | 101 | 109.8 |
| | 100 | 860 | 101 | 106 |
| | 150 | 760 | 102 | 114 |
| | 200 | 660 | 101 | 114 |
| | 250 | 560 | 101 | 113 |
| | 300 | 460 | 100 | 116 |
| | 350 | 360 | 98 | 115 |
| | 400 | 260 | 94 | 111 |
| | 450 | 160 | 99. 5 | 106 |
| 600 | 80 | 1100 | 152 | 153 |
| | 100 | 1060 | 152 | 153 |
| | 150 | 960 | 153 | 159 |
| | 200 | 860 | 154 | 159 |
| | 250 | 760 | 153 | 158 |
| | 300 | 660 | 152 | 161 |
| | 350 | 560 | 151 | 159 |
| | 400 | 460 | 142 | 156 |
| | 450 | 360 | 149 | 151 |
| | 500 | 260 | 131 | 145 |
| 700 | 200 | 1080 | 215.9 | 212.9 |
| | 250 | 980 | 216.1 | 212.3 |
| | 300 | 880 | 218.5 | 216.3 |
| | 350 | 780 | 212.4 | 212.9 |
| | 400 | 680 | 206.7 | 208.5 |
| | 450 | 580 | 199.6 | 204.1 |
| | 500 | 480 | 194 | 204 |
| | 600 | 280 | 178 | 187 |
| 800 | 400 | 880 | 285 | 277.9 |
| | 450 | 780 | 277.7 | 273.5 |
| | 500 | 680 | 272.2 | 266.6 |
| | 600 | 480 | 252 | 257 |
| | 700 | 280 | 229 | 236 |
| 900 | 400 | 1080 | 387.4 | 366.6 |

| DN | dn | L | Mass ( Kg ) | |
|---|---|---|---|---|
| | | | T-type | K-type |
| 900 | 450 | 980 | 372.2 | 362.2 |
| | 500 | 880 | 366.8 | 355.4 |
| | 600 | 680 | 349.4 | 336.7 |
| | 700 | 480 | 318 | 327 |
| | 800 | 280 | 288 | 294 |
| 1000 | 600 | 880 | 476 | 445 |
| | 700 | 680 | 446.3 | 420.8 |
| | 800 | 480 | 392 | 403 |
| | 900 | 280 | 354 | 368 |
| 1200 | 600 | 1280 | 745 | 691.8 |
| | 700 | 1080 | 729.6 | 669.1 |
| | 800 | 880 | 710.7 | 636 |
| | 900 | 680 | 674.3 | 599.3 |
| | 1000 | 480 | 570 | 580 |
| 1400 | 600 | 960 | 844.4 | 704.6 |
| | 700 | 860 | 855.6 | 705 |
| | 800 | 760 | 859.5 | 700.2 |
| | 900 | 660 | 862.8 | 697.7 |
| | 1000 | 560 | 861.6 | 694.5 |
| | 1200 | 360 | 711 | 698 |
| 1600 | 800 | 960 | 1207 | 978.7 |
| | 900 | 860 | 1220 | 985.7 |
| | 1000 | 760 | 1211 | 974.1 |
| | 1200 | 560 | 1212 | 940.9 |
| | 1400 | 360 | 950 | 936 |
| 1800 | 1000 | 960 | 1547 | 1301 |
| | 1200 | 760 | 1549 | 1269 |
| | 1400 | 560 | 1581 | 1210 |
| | 1600 | 360 | 1605 | 1235 |
| 2000 | 1000 | 1160 | / | 1696 |
| | 1200 | 960 | / | 1663 |
| | 1400 | 760 | / | 1605 |
| | 1600 | 560 | / | 1560 |
| | 1800 | 360 | / | 1566 |

● Double Flanged Taper/Reducer

| DN | dn | L | Mass ( Kg ) | | |
|---|---|---|---|---|---|
| | | | PN10 | PN16 | PN25 |
| 100 | 80 | 200 | 9. 3 | 9. 3 | 9. 8 |
| 150 | 80 | 400 | 16 | 16. 1 | 17. 1 |
| | 100 | 300 | 15 | 15 | 17. 5 |
| 200 | 80 | 600 | 25. 1 | 25. 1 | 26. 9 |
| | 100 | 600 | 27. 3 | 27. 5 | 25 |
| | 150 | 300 | 22 | 27. 5 | 25 |
| 250 | 100 | 600 | 33 | 32. 6 | 36. 8 |
| | 150 | 600 | 38. 6 | 39. 5 | 35. 5 |
| | 200 | 300 | 30 | 29. 5 | 35. 5 |
| 300 | 100 | 600 | 44 | 43.6 | 49.4 |
| | 150 | 600 | 46. 4 | 46 | 52. 6 |
| | 200 | 600 | 51. 7 | 51 | 58. 7 |
| | 250 | 300 | 40. 5 | 39. 5 | 49 |
| 350 | 100 | 750 | 52.5 | 55.2 | 63.7 |
| | 150 | 700 | 56.0 | 58.8 | 67.7 |
| | 200 | 600 | 58. 1 | 60. 5 | 70. 9 |
| | 250 | 600 | 64. 9 | 67 | 79. 2 |
| | 300 | 300 | 49. 5 | 52 | 66 |
| 400 | 100 | 800 | 62.9 | 69.4 | 79.1 |
| | 150 | 750 | 66.6 | 73.1 | 83.2 |
| | 200 | 600 | 65. 7 | 71 | 84. 4 |
| | 250 | 600 | 72 | 77 | 92. 2 |
| | 300 | 600 | 78. 8 | 84 | 101 |
| | 350 | 300 | 58 | 67 | 86 |
| 450 | 100 | 900 | 76.7 | 86.0 | 96.9 |
| | 150 | 800 | 77.4 | 86.7 | 98.0 |
| | 200 | 750 | 81.0 | 90.4 | 102.6 |
| | 250 | 600 | 79. 5 | 87. 5 | 96. 9 |
| | 300 | 600 | 86. 8 | 95 | 107 |
| | 350 | 600 | 92. 7 | 104 | 118 |
| | 400 | 300 | 72. 4 | 81 | 113 |
| 500 | 100 | 950 | 91. 6 | 105.9 | 116.9 |
| | 150 | 900 | 95. 8 | 110.2 | 121.6 |
| | 200 | 800 | 95. 7 | 110.0 | 122.3 |
| | 250 | 700 | 99. 4 | 114 | 130 |
| | 300 | 600 | 96. 2 | 111 | 129 |
| | 350 | 600 | 103 | 121 | 141 |
| | 400 | 600 | 110 | 130 | 153 |
| | 450 | 300 | 116 | 139 | 157 |
| 600 | 100 | 1050 | 125.8 | 150.6 | 163.5 |
| | 150 | 1000 | 130.1 | 155.1 | 168.5 |
| | 250 | 900 | 139.5 | 164.1 | 180.2 |
| | 300 | 800 | 145 | 171 | 191 |
| | 350 | 700 | 138 | 167 | 190 |
| | 400 | 600 | 132 | 164 | 190 |
| | 450 | 600 | 140 | 175 | 195 |
| | 500 | 600 | 149 | 190 | 216 |

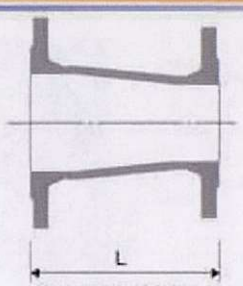

Concentric Type

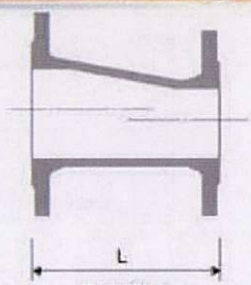

Flat Type

| DN | dn | L | Mass ( Kg ) | | |
|---|---|---|---|---|---|
| | | | PN10 | PN16 | PN25 |
| 700 | 200 | 1100 | 181.1 | 195.3 | 229.6 |
| | 250 | 1050 | 186.8 | 200.6 | 236.7 |
| | 300 | 1100 | 192.4 | 206.2 | 243.9 |
| | 350 | 900 | 188.3 | 205.2 | 245.6 |
| | 400 | 800 | 183.5 | 204.1 | 245.8 |
| | 450 | 700 | 190 | 213 | 251 |
| | 500 | 600 | 178 | 208 | 252 |
| | 600 | 600 | 195 | 243 | 288 |
| 800 | 400 | 1030 | 260.8 | 285.0 | 340.2 |
| | 450 | 900 | 247.8 | 274.8 | 331.2 |
| | 500 | 800 | 255 | 285 | 347 |
| | 600 | 600 | 234 | 275 | 340 |
| | 700 | 600 | 250 | 285 | 374 |
| 900 | 400 | 1100 | 311.5 | 339.6 | 404.8 |
| | 450 | 1100 | 347 | 380 | 467 |
| | 500 | 1000 | 337 | 377 | 470 |
| | 600 | 800 | 315 | 366 | 462 |
| | 700 | 600 | 293 | 333 | 446 |
| | 800 | 600 | 308 | 352 | 468 |
| 1000 | 500 | 1200 | 452 | 501 | 585 |
| | 600 | 1000 | 427 | 487 | 574 |
| | 700 | 800 | 403 | 452 | 556 |
| | 800 | 600 | 369 | 418 | 540 |
| | 900 | 600 | 373 | 438 | 545 |
| 1200 | 600 | 1150 | 555.2 | 638.5 | 741.6 |
| | 700 | 1345 | 698 | 768 | 882 |
| | 800 | 1160 | 695 | 765 | 897 |
| | 900 | 975 | 628 | 708 | 871 |
| | 1000 | 790 | 586 | 692 | 881 |
| 1400 | 700 | 850 | 554.7 | 629.6 | 801.8 |
| | 800 | 950 | 665.7 | 744.2 | 929.9 |
| | 900 | 1100 | 786.5 | 868.9 | 1065 |
| | 1000 | 1000 | 788 | 886.5 | 1099 |
| | 1200 | 850 | 814 | 947 | 1223 |
| 1600 | 1000 | 1650 | 1354 | 1484 | 1717 |
| | 1200 | 1000 | 1055 | 1205 | 1456 |
| | 1400 | 910 | 1103 | 1273 | 1641 |
| 1800 | 1000 | 1760 | 1620 | 1770 | 2060 |
| | 1200 | 1710 | 1747 | 1899 | 2199 |
| | 1400 | 1340 | 1588 | 1760 | 2067 |

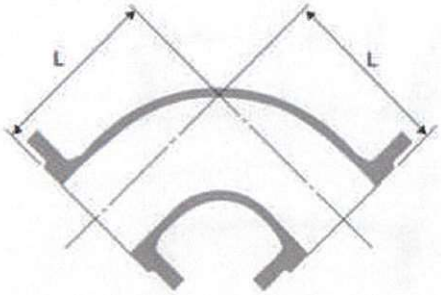


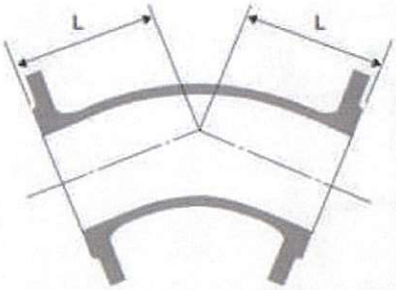


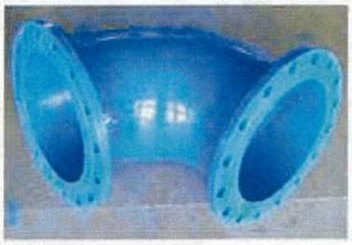

● Double Flange Bend90°

| DN | L | Mass ( Kg ) | | |
|---|---|---|---|---|
| | | PN10 | PN16 | PN25 |
| 80 | 165 | 9. 6 | 9. 6 | 9. 6 |
| 100 | 180 | 11. 9 | 11. 9 | 12. 9 |
| 150 | 220 | 20 | 20 | 22 |
| 200 | 260 | 31 | 30. 5 | 34. 5 |
| 250 | 350 | 50 | 49. 5 | 57 |
| 300 | 400 | 70 | 70 | 81 |
| 350 | 450 | 90 | 96 | 113 |
| 400 | 500 | 116 | 127 | 149 |
| 450 | 550 | 143 | 160 | 190 |
| 500 | 600 | 181 | 211 | 235 |
| 600 | 700 | 272 | 325 | 353 |
| 700 | 800 | 386 | 416 | 473 |
| 800 | 900 | 533 | 572 | 653 |
| 900 | 1000 | 698 | 745 | 841 |
| 1000 | 1100 | 907 | 990 | 1163 |
| 1200 | 1300 | 1490 | 1619 | 1728 |
| 1400 | 1350 | 2199 | 2335 | 2640 |
| 1600 | 1450 | 2663 | 2481 | 2778 |
| 1800 | 1550 | 3348 | 3572 | 3980 |
| 2000 | 1650 | 4307 | 4613 | 5065 |

● Double Flange Bend45°

| DN | L | Mass ( Kg ) | | |
|---|---|---|---|---|
| | | PN10 | PN16 | PN25 |
| 80 | 130 | 9. 3 | 9. 3 | 9. 3 |
| 100 | 140 | 11. 3 | 11. 3 | 12. 4 |
| 150 | 160 | 18. 5 | 18. 5 | 20. 5 |
| 200 | 180 | 27. 5 | 27 | 31 |
| 250 | 350 | 55 | 54 | 62 |
| 300 | 400 | 78 | 77 | 88 |
| 350 | 298 | 76 | 83 | 89 |
| 400 | 324 | 96 | 107 | 129 |
| 450 | 349 | 116 | 132 | 158 |
| 500 | 375 | 145 | 175 | 198 |
| 600 | 426 | 212 | 266 | 294 |
| 700 | 478 | 296 | 326 | 388 |
| 800 | 529 | 403 | 442 | 528 |
| 900 | 581 | 519 | 567 | 669 |
| 1000 | 632 | 668 | 751 | 881 |
| 1200 | 750 | 1050 | 1178 | 1345 |
| 1400 | 775 | 1388 | 1524 | 1852 |
| 1600 | 845 | 1915 | 2119 | 2416 |
| 1800 | 910 | 2465 | 2717 | 3125 |
| 2000 | 980 | 3149 | 3455 | 3907 |

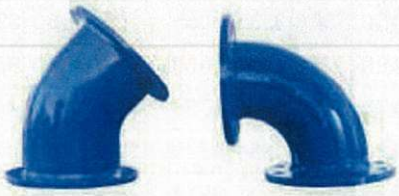

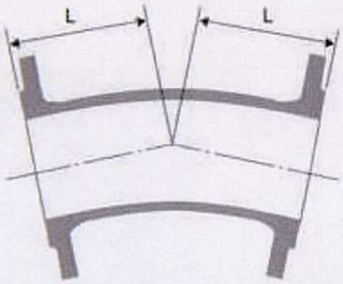


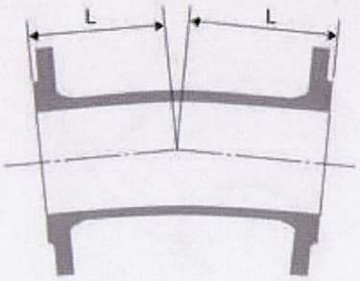


## BS4772 Long Bend

●Double Flange Bend22.5°

| DN | L | Mass ( Kg ) | | |
|---|---|---|---|---|
| | | PN10 | PN16 | PN25 |
| 80 | 130 | 9. 2 | 9. 2 | 9. 2 |
| 100 | 140 | 11. 5 | 11. 5 | 12. 5 |
| 150 | 160 | 18. 6 | 18. 6 | 20. 6 |
| 200 | 180 | 27. 4 | 27 | 31. 2 |
| 250 | 350 | 55. 3 | 54. 5 | 58. 4 |
| 300 | 400 | 78. 3 | 77. 5 | 88. 7 |
| 350 | 298 | 76. 8 | 83 | 100 |
| 400 | 324 | 96 | 107 | 130 |
| 450 | 349 | 118 | 135 | 166 |
| 500 | 375 | 146 | 176 | 200 |
| 600 | 426 | 214 | 267 | 296 |
| 700 | 478 | 252 | 342 | -- |
| 800 | 529 | 288 | 448 | -- |
| 900 | 581 | 361 | 588 | -- |
| 1000 | 632 | 459 | 773 | -- |
| 1200 | 735 | 717 | 1213 | -- |
| 1400 | 835 | 1021 | 1635 | -- |
| 1600 | 940 | 1190 | 2325 | -- |
| 1800 | | 1640 | 1864 | -- |
| 2000 | | 2081 | 2357 | -- |

●Double Flange Bend11.25°

| DN | L | Mass ( Kg ) | | |
|---|---|---|---|---|
| | | PN10 | PN16 | PN25 |
| 80 | 130 | 9. 2 | 9. 2 | 9. 2 |
| 100 | 140 | 11. 5 | 11. 5 | 12. 5 |
| 150 | 160 | 18. 6 | 18. 6 | 20. 6 |
| 200 | 180 | 27. 9 | 27. 5 | 31. 7 |
| 250 | 350 | 55. 8 | 55 | 58. 9 |
| 300 | 400 | 78. 8 | 78 | 89. 2 |
| 350 | 298 | 77. 3 | 83. 5 | 100 |
| 400 | 324 | 96. 8 | 108 | 131 |
| 450 | 349 | 118 | 135 | 166 |
| 500 | 375 | 147 | 177 | 201 |
| 600 | 426 | 215 | 268 | 297 |
| 700 | 478 | 240 | 343 | -- |
| 800 | 529 | 270 | 451 | -- |
| 900 | 581 | 303 | 592 | -- |
| 1000 | 632 | 382 | 778 | -- |
| 1200 | 735 | 590 | 1220 | -- |
| 1400 | 835 | 827 | 1643 | -- |
| 1600 | 940 | 1203 | 2338 | -- |
| 1800 | | 1342 | 1566 | -- |
| 2000 | | 1694 | 1970 | -- |

## EN545 Series A Bend

●Double Flange Bend22.5°

| DN | L | Mass ( Kg ) | | |
|---|---|---|---|---|
| | | PN10 | PN16 | PN25 |
| 80 | 80 | 9.2 | 9.2 | 9.2 |
| 100 | 85 | 11.5 | 11.5 | 12.6 |
| 150 | 100 | 18.6 | 18.6 | 20.8 |
| 200 | 110 | 27 | 27 | 31 |
| 250 | 125 | 37.9 | 37.1 | 46 |
| 300 | 140 | 51 | 50.3 | 63 |
| 350 | 155 | 61.1 | 67.9 | 87.2 |
| 400 | 165 | 74.8 | 90.7 | 113.1 |
| 450 | 180 | 87.3 | 110 | 135.4 |
| 500 | 190 | 107.8 | 142.9 | 168.3 |
| 600 | 220 | 154.7 | 215.7 | 246 |
| 700 | 300 | 216.5 | 250.9 | 330.2 |
| 800 | 330 | 294.9 | 330.3 | 422.3 |
| 900 | 360 | 373 | 416.2 | 528.2 |
| 1000 | 390 | 477.2 | 552.6 | 697.8 |
| 1200 | 450 | 736.6 | 853.2 | 1035 |
| 1400 | 460 | 1021 | 1157 | 1388 |
| 1600 | 470 | 1284 | 1468 | 1789 |
| 1800 | 480 | 1640 | 1864 | 2229 |
| 2000 | 520 | 2081 | 2357 | 2914 |

●Double Flange Bend11.25°

| DN | L | Mass ( Kg ) | | |
|---|---|---|---|---|
| | | PN10 | PN16 | PN25 |
| 80 | 70 | 9.2 | 9.2 | 9.2 |
| 100 | 75 | 11.5 | 11.5 | 12.5 |
| 150 | 85 | 17.2 | 17.2 | 19.5 |
| 200 | 90 | 24.3 | 24.4 | 28.8 |
| 250 | 100 | 34.7 | 33.8 | 42.8 |
| 300 | 110 | 46.4 | 45.7 | 58.4 |
| 350 | 120 | 54.9 | 61.8 | 81 |
| 400 | 130 | 66.8 | 82.7 | 105.1 |
| 450 | 135 | 76.6 | 99.3 | 124.7 |
| 500 | 140 | 93.6 | 128.7 | 154.1 |
| 600 | 160 | 134.7 | 195.7 | 225.9 |
| 700 | 205 | 206.6 | 241 | 320.3 |
| 800 | 230 | 270 | 308 | 367.3 |
| 900 | 245 | 303 | 351 | 450.2 |
| 1000 | 265 | 382 | 465 | 607 |
| 1200 | 360 | 639.2 | 755.8 | 937.2 |
| 1400 | 380 | 873.8 | 995.4 | 1275 |
| 1600 | 400 | 1203 | 1382 | 1664 |
| 1800 | 410 | 1415 | 1641 | 2075 |
| 2000 | 415 | 1711 | 1985 | 2629 |

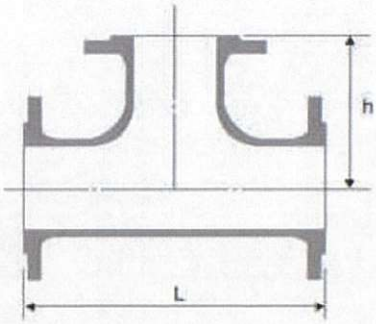


● All Flange Tee

| Body DN | Branch dn | L | h | Mass ( Kg ) PN10 | PN16 | PN25 |
|---|---|---|---|---|---|---|
| 80 | 80 | 330 | 165 | 15. 6 | 15. 6 | 15. 6 |
| 100 | 80 | 360 | 175 | 18. 4 | 18. 4 | 19. 5 |
| | 100 | 360 | 180 | 19. 4 | 19. 4 | 21 |
| 150 | 80 | 440 | 205 | 28. 5 | 28. 5 | 31 |
| | 100 | 440 | 210 | 29. 5 | 29. 5 | 32 |
| | 150 | 440 | 220 | 32. 5 | 32. 5 | 36 |
| 200 | 80 | 520 | 235 | 42 | 41. 5 | 46 |
| | 100 | 520 | 240 | 43 | 42 | 47. 5 |
| | 150 | 520 | 250 | 46 | 45 | 51 |
| | 200 | 520 | 260 | 49. 5 | 49 | 56 |
| 250 | 80 | 700 | 265 | 49. 7 | 49. 3 | 56. 7 |
| | 100 | 700 | 275 | 68 | 67 | 75 |
| | 150 | 700 | 300 | 72 | 71 | 81 |
| | 200 | 700 | 325 | 76 | 75 | 85 |
| | 250 | 700 | 350 | 82 | 81 | 93 |
| 300 | 100 | 800 | 300 | 94 | 93 | 105 |
| | 150 | 800 | 325 | 98 | 97 | 109 |
| | 200 | 800 | 350 | 102 | 101 | 114 |
| | 250 | 800 | 375 | 109 | 108 | 121 |
| | 300 | 800 | 400 | 116 | 115 | 131 |
| 350 | 100 | 850 | 325 | 116 | 122 | 139 |
| | 150 | 850 | 325 | 119 | 125 | 142 |
| | 200 | 850 | 325 | 121 | 128 | 146 |
| | 250 | 850 | 325 | 128 | 134 | 154 |
| | 300 | 850 | 425 | 132 | 138 | 160 |
| | 350 | 850 | 425 | 142 | 151 | 176 |
| 400 | 100 | 900 | 350 | 143 | 154 | 177 |
| | 150 | 900 | 350 | 144 | 156 | 181 |
| | 200 | 900 | 350 | 148 | 159 | 184 |
| | 250 | 900 | 350 | 151 | 161 | 198 |
| | 300 | 900 | 450 | 160 | 184 | 213 |
| | 350 | 900 | 450 | 170 | 183 | 215 |
| | 400 | 900 | 450 | 174 | 191 | 225 |

| Body DN | Branch dn | L | h | Mass ( Kg ) PN10 | PN16 | PN25 |
|---|---|---|---|---|---|---|
| 450 | 100 | 950 | 375 | 176 | 193 | 225 |
| | 150 | 950 | 375 | 182 | 199 | 231 |
| | 200 | 950 | 375 | 190 | 207 | 240 |
| | 250 | 950 | 375 | 199 | 216 | 250 |
| | 300 | 950 | 475 | 210 | 227 | 263 |
| | 350 | 950 | 475 | 219 | 240 | 279 |
| | 400 | 950 | 475 | 231 | 254 | 296 |
| | 450 | 950 | 475 | 243 | 269 | 315 |
| 500 | 100 | 1000 | 400 | 210 | 241 | 265 |
| | 150 | 1000 | 400 | 214 | 243 | 269 |
| | 200 | 1000 | 400 | 215 | 245 | 271 |
| | 250 | 1000 | 400 | 218 | 258 | 280 |
| | 300 | 1000 | 500 | 227 | 255 | 287 |
| | 350 | 1000 | 500 | 239 | 276 | 298 |
| | 400 | 1000 | 500 | 242 | 276 | 311 |
| | 450 | 1000 | 500 | 249 | 298 | 327 |
| | 500 | 1000 | 500 | 252 | 297 | 332 |
| 600 | 100 | 1100 | 450 | 268 | 329 | 352 |
| | 150 | 1100 | 450 | 283 | 340 | 370 |
| | 200 | 1100 | 450 | 305 | 358 | 388 |
| | 250 | 1100 | 450 | 307 | 360 | 392 |
| | 300 | 1100 | 550 | 312 | 374 | 398 |
| | 350 | 1100 | 550 | 326 | 380 | 413 |
| | 400 | 1100 | 550 | 329 | 387 | 427 |
| | 450 | 1100 | 550 | 338 | 417 | 448 |
| | 500 | 1100 | 550 | 349 | 420 | 464 |
| | 600 | 1100 | 550 | 355 | 434 | 477 |
| 700 | 100 | 540 | 510 | 253 | 295 | |
| | 150 | 595 | 515 | 255 | 296 | |
| | 200 | 650 | 525 | 258 | 298 | |
| | 250 | 705 | 530 | 310 | 335 | |
| | 300 | 760 | 540 | 319 | 342 | |
| | 350 | 815 | 545 | 340 | 375 | |



● All Flange Tee

| Body DN | Branch dn | L | h | Mass (Kg) PN10 | Mass (Kg) PN16 |
|---|---|---|---|---|---|
| 700 | 400 | 870 | 555 | 343 | 379 |
| | 450 | 925 | 560 | 429 | 436 |
| | 500 | 980 | 570 | 442 | 481 |
| | 600 | 1090 | 585 | 476 | 523 |
| | 700 | 1200 | 600 | 477 | 523 |
| 800 | 100 | 580 | 570 | 345 | 383 |
| | 150 | 635 | 575 | 349 | 387 |
| | 200 | 690 | 585 | 352 | 390 |
| | 250 | 745 | 590 | 372 | 410 |
| | 300 | 800 | 600 | 423 | 427 |
| | 350 | 855 | 605 | 443 | 471 |
| | 400 | 910 | 615 | 441 | 484 |
| | 450 | 965 | 620 | 519 | 563 |
| | 500 | 1020 | 630 | 561 | 599 |
| | 600 | 1350 | 645 | 613 | 678 |
| | 700 | 1350 | 660 | 663 | 711 |
| | 800 | 1350 | 675 | 657 | 715 |
| 900 | 100 | 620 | 630 | 428 | 476 |
| | 150 | 675 | 635 | 432 | 480 |
| | 200 | 730 | 645 | 436 | 484 |
| | 250 | 785 | 650 | 499 | 533 |
| | 300 | 840 | 660 | 523 | 569 |
| | 350 | 895 | 665 | 538 | 588 |
| | 400 | 950 | 675 | 541 | 594 |
| | 450 | 1005 | 680 | 673 | 729 |
| | 500 | 1060 | 690 | 726 | 784 |
| | 600 | 1500 | 705 | 787 | 860 |
| | 700 | 1500 | 720 | 843 | 901 |
| | 800 | 1500 | 735 | 860 | 913 |
| | 900 | 1500 | 750 | 853 | 924 |
| 1000 | 100 | 660 | 690 | 524 | 572 |
| | 150 | 715 | 695 | 534 | 582 |
| | 200 | 770 | 705 | 546 | 629 |

| Body DN | Branch dn | L | h | Mass (Kg) PN10 | Mass (Kg) PN16 |
|---|---|---|---|---|---|
| 1000 | 250 | 825 | 710 | 631 | 703 |
| | 300 | 880 | 720 | 651 | 739 |
| | 350 | 935 | 725 | 660 | 753 |
| | 400 | 990 | 735 | 668 | 755 |
| | 450 | 1045 | 740 | 850 | 911 |
| | 500 | 1100 | 750 | 955 | 1007 |
| | 600 | 1650 | 765 | 1007 | 1116 |
| | 700 | 1650 | 780 | 1067 | 1152 |
| | 800 | 1650 | 795 | 1085 | 1168 |
| | 900 | 1650 | 810 | 1095 | 1219 |
| | 1000 | 1650 | 825 | 1105 | 1229 |
| 1200 | 100 | 660 | 810 | 996 | 1082 |
| | 150 | 715 | 815 | 998 | 1084 |
| | 200 | 775 | 825 | 1000 | 1086 |
| | 250 | 830 | 830 | 1002 | 1094 |
| | 300 | 890 | 840 | 1004 | 1106 |
| | 350 | 950 | 845 | 1006 | 1113 |
| | 400 | 1005 | 855 | 1008 | 1122 |
| | 500 | 1120 | 870 | 1109 | 1255 |
| | 600 | 1240 | 885 | 1101 | 1256 |
| | 700 | 1355 | 900 | 1279 | 1423 |
| | 800 | 1470 | 915 | 1291 | 1439 |
| | 900 | 1585 | 930 | 1427 | 1662 |
| | 1000 | 1700 | 945 | 1494 | 1664 |
| | 1200 | 1935 | 975 | 2201 | 2321 |
| 1400 | 100 | 970 | 905 | 1227 | 1363 |
| | 200 | 1085 | 920 | 1231 | 1367 |
| | 400 | 1320 | 950 | 1514 | 1656 |
| | 600 | 1550 | 980 | 1655 | 1818 |
| | 800 | 1780 | 1010 | 1886 | 2041 |
| | 1000 | 2015 | 1040 | 2131 | 2309 |

| Body DN | Branch dn | L | h | Mass (Kg) PN10 | Mass (Kg) PN16 |
|---|---|---|---|---|---|
| 1400 | 1200 | 2245 | 1070 | 2567 | 2767 |
| | 1400 | 2480 | 1100 | 2781 | 2985 |
| 1600 | 100 | 1020 | 1015 | 1874 | 2078 |
| | 200 | 1140 | 1030 | 1880 | 2084 |
| | 400 | 1370 | 1060 | 2000 | 2210 |
| | 600 | 1600 | 1090 | 2167 | 2398 |
| | 800 | 1835 | 1120 | 2452 | 2675 |
| | 1000 | 2065 | 1150 | 2740 | 2986 |
| | 1200 | 2300 | 1180 | 3058 | 3327 |
| | 1400 | 2530 | 1210 | 3498 | 3770 |
| | 1600 | 2760 | 1240 | 3886 | 4192 |
| 1800 | 100 | 1075 | 1125 | 2346 | 2598 |
| | 200 | 1190 | 1140 | 2350 | 2602 |
| | 400 | 1420 | 1170 | 2574 | 2835 |
| | 600 | 1655 | 1200 | 2694 | 2972 |
| | 800 | 1885 | 1230 | 3023 | 3299 |
| | 1000 | 2120 | 1260 | 3375 | 3669 |
| | 1200 | 2350 | 1290 | 3740 | 4056 |
| | 1400 | 2580 | 1320 | 4254 | 4574 |
| | 1600 | 2815 | 1350 | 4691 | 5147 |
| | 1800 | 3045 | 1380 | 5123 | 5501 |
| 2000 | 100 | 1125 | 1235 | 2836 | 3142 |
| | 200 | 1240 | 1250 | 2840 | 3146 |
| | 400 | 1475 | 1280 | 3002 | 3314 |
| | 600 | 1705 | 1310 | 3300 | 3642 |
| | 800 | 1940 | 1340 | 3844 | 4459 |
| | 1000 | 2170 | 1370 | 4112 | 4459 |
| | 1400 | 2635 | 1430 | 4966 | 5340 |
| | 1600 | 2865 | 1460 | 5625 | 6033 |
| | 1800 | 3100 | 1490 | 6115 | 6547 |
| | 2000 | 3330 | 1520 | 6648 | 7107 |

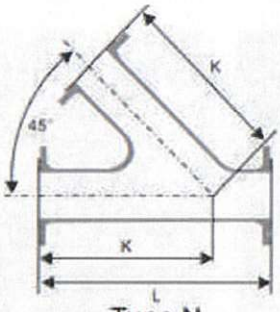

Type N

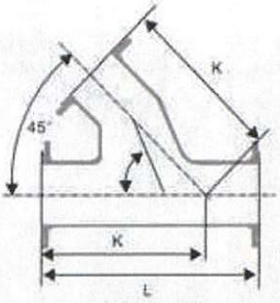

Type M

● All Flange 45° Angle Branch Tee

| DN | dn | Type | L | K | Mass PN16 (Kg) |
|---|---|---|---|---|---|
| 80 | 80 | N | 500 | 375 | 23 |
| 100 | 80 | N | 500 | 390 | 27 |
| | 100 | N | 540 | 405 | 30 |
| 150 | 80 | N | 590 | 480 | 41 |
| | 100 | N | 640 | 480 | 45 |
| | 150 | N | 640 | 480 | 52 |
| 200 | 80 | N | 635 | 535 | 55 |
| | 100 | N | 635 | 535 | 58 |
| | 150 | N | 735 | 560 | 71 |
| | 200 | N | 735 | 560 | 81 |
| 250 | 80 | N | 660 | 585 | 75 |
| | 100 | N | 710 | 610 | 82 |
| | 150 | N | 830 | 640 | 100 |
| | 200 | N | 830 | 640 | 112 |
| | 250 | N | 830 | 640 | 126 |
| 300 | 80 | N | 685 | 610 | 97 |
| | 100 | N | 685 | 610 | 100 |
| | 150 | N | 790 | 660 | 120 |
| | 200 | N | 865 | 685 | 140 |
| | 250 | N | 930 | 715 | 161 |
| | 300 | N | 930 | 715 | 177 |
| 350 | 100 | N | 685 | 635 | 124 |
| | 150 | N | 740 | 660 | 140 |
| | 200 | N | 840 | 710 | 165 |
| | 250 | N | 880 | 740 | 185 |
| | 300 | M | 880 | 790 | 207 |
| | 350 | M | 880 | 790 | 168 |
| 400 | 100 | N | 760 | 710 | 165 |
| | 150 | N | 815 | 740 | 180 |
| | 200 | N | 865 | 760 | 200 |

| DN | dn | Type | L | K | Mass PN16 (Kg) |
|---|---|---|---|---|---|
| 400 | 250 | N | 970 | 820 | 230 |
| | 300 | M | 970 | 870 | 254 |
| | 350 | M | 970 | 870 | 283 |
| | 400 | M | 970 | 870 | 310 |
| 450 | 100 | N | 740 | 710 | 185 |
| | 150 | N | 840 | 760 | 211 |
| | 200 | N | 890 | 790 | 233 |
| | 250 | N | 990 | 820 | 272 |
| | 300 | M | 1040 | 900 | 298 |
| | 350 | M | 1060 | 950 | 338 |
| | 400 | M | 1060 | 950 | 366 |
| | 450 | M | 1060 | 950 | 392 |
| 500 | 150 | N | 790 | 765 | 245 |
| | 200 | N | 890 | 810 | 278 |
| | 250 | N | 940 | 840 | 304 |
| | 300 | M | 990 | 865 | 334 |
| | 350 | M | 1065 | 950 | 389 |
| | 400 | M | 1140 | 1025 | 439 |
| | 450 | M | 1140 | 1025 | 468 |
| | 500 | M | 1140 | 1025 | 505 |
| 600 | 150 | N | 890 | 840 | 354 |
| | 200 | N | 940 | 890 | 382 |
| | 250 | N | 990 | 915 | 413 |
| | 300 | M | 1090 | 965 | 460 |
| | 350 | M | 1160 | 1000 | 520 |
| | 400 | M | 1230 | 1035 | 568 |
| | 450 | M | 1295 | 1070 | 618 |
| | 500 | M | 1310 | 1180 | 680 |
| | 600 | M | 1310 | 1180 | 768 |



● All Flange 45° Angle Branch Tee

| DN | dn | Type | L | K | Mass PN16 ( Kg ) |
|---|---|---|---|---|---|
| 700 | 200 | N | 1040 | 1015 | 547 |
| | 250 | N | 1070 | 1040 | 582 |
| | 300 | N | 1170 | 1090 | 649 |
| | 350 | M | 1240 | 1125 | 708 |
| | 400 | M | 1310 | 1160 | 772 |
| | 450 | M | 1370 | 1195 | 860 |
| | 500 | M | 1440 | 1240 | 945 |
| | 600 | M | 1570 | 1370 | 1133 |
| | 700 | M | 1570 | 1370 | 1240 |
| 800 | 250 | N | 1180 | 1150 | 760 |
| | 300 | N | 1200 | 1170 | 800 |
| | 350 | N | 1270 | 1205 | 867 |
| | 400 | M | 1340 | 1240 | 938 |
| | 450 | M | 1400 | 1270 | 1009 |
| | 500 | M | 1470 | 1305 | 1128 |
| | 600 | M | 1600 | 1370 | 1314 |
| | 700 | M | 1660 | 1450 | 1476 |
| | 800 | M | 1720 | 1520 | 1674 |
| 900 | 300 | N | 1270 | 1245 | 980 |
| | 350 | N | 1340 | 1280 | 1056 |
| | 400 | N | 1410 | 1315 | 1136 |
| | 450 | M | 1350 | 1350 | 1218 |
| | 500 | M | 1560 | 1390 | 1322 |
| | 600 | M | 1730 | 1475 | 1590 |
| | 700 | M | 1780 | 1540 | 1757 |
| | 800 | M | 1830 | 1610 | 1964 |
| | 900 | M | 1880 | 1680 | 2194 |

| DN | dn | Type | L | K | Mass PN16 ( Kg ) |
|---|---|---|---|---|---|
| 1000 | 350 | N | 1415 | 1380 | 1320 |
| | 400 | N | 1485 | 1415 | 1408 |
| | 450 | N | 1550 | 1450 | 1500 |
| | 500 | M | 1680 | 1510 | 1647 |
| | 600 | M | 1800 | 1575 | 1915 |
| | 700 | M | 1930 | 1640 | 2144 |
| | 800 | M | 2060 | 1700 | 2410 |
| | 900 | M | 2180 | 1980 | 2812 |
| | 1000 | M | 2180 | 1980 | 3052 |
| 1100 | 400 | N | 1560 | 1515 | 1677 |
| | 450 | N | 1625 | 1550 | 1777 |
| | 500 | M | 1730 | 1600 | 1922 |
| | 600 | M | 1830 | 1650 | 2200 |
| | 700 | M | 1980 | 1790 | 2490 |
| | 800 | M | 2120 | 1930 | 2827 |
| | 900 | M | 2265 | 2065 | 3205 |
| | 1000 | M | 2265 | 2065 | 3452 |
| | 1100 | M | 2265 | 2065 | 3703 |
| 1200 | 450 | N | 1780 | 1700 | 2210 |
| | 500 | N | 1880 | 1750 | 2367 |
| | 600 | M | 1980 | 1855 | 2695 |
| | 700 | M | 2125 | 1920 | 2988 |
| | 800 | M | 2270 | 1990 | 3330 |
| | 900 | M | 2415 | 2060 | 3693 |
| | 1000 | M | 2480 | 2280 | 4136 |
| | 1100 | M | 2480 | 2280 | 4410 |
| | 1200 | M | 2480 | 2280 | 4728 |

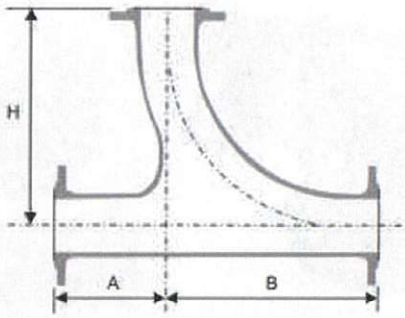


● All Flange Radial Tee

| DN | dn | A | B | H | Mass PN16 (Kg) |
|---|---|---|---|---|---|
| 80 | 80 | 165 | 380 | 380 | 24 |
| 100 | 80 | 180 | 390 | 390 | 28 |
| | 100 | 180 | 400 | 400 | 31 |
| 150 | 80 | 220 | 395 | 415 | 40 |
| | 100 | 220 | 405 | 425 | 43 |
| | 150 | 220 | 450 | 450 | 52 |
| 200 | 80 | 220 | 400 | 440 | 53 |
| | 100 | 220 | 410 | 450 | 56 |
| | 150 | 260 | 455 | 475 | 67 |
| | 200 | 260 | 500 | 500 | 80 |
| 250 | 80 | 220 | 405 | 465 | 70 |
| | 100 | 220 | 415 | 475 | 74 |
| | 150 | 300 | 460 | 500 | 91 |
| | 200 | 300 | 505 | 525 | 104 |
| | 250 | 350 | 550 | 550 | 124 |
| 300 | 80 | 220 | 415 | 490 | 90 |
| | 100 | 300 | 425 | 500 | 101 |
| | 150 | 300 | 470 | 525 | 114 |
| | 200 | 400 | 515 | 550 | 137 |
| | 250 | 400 | 560 | 575 | 154 |
| | 300 | 400 | 600 | 600 | 174 |
| 350 | 100 | 300 | 430 | 525 | 126 |
| | 150 | 300 | 475 | 550 | 140 |
| | 200 | 400 | 520 | 575 | 166 |
| | 250 | 400 | 565 | 600 | 185 |
| | 300 | 400 | 605 | 625 | 206 |
| | 350 | 450 | 650 | 650 | 235 |
| 400 | 100 | 300 | 435 | 550 | 160 |

| DN | dn | A | B | H | Mass PN16 (Kg) |
|---|---|---|---|---|---|
| 400 | 150 | 300 | 480 | 575 | 170 |
| | 200 | 400 | 525 | 600 | 200 |
| | 250 | 400 | 570 | 625 | 218 |
| | 300 | 450 | 610 | 650 | 246 |
| | 350 | 450 | 655 | 675 | 272 |
| | 400 | 500 | 700 | 700 | 307 |
| 450 | 100 | 300 | 440 | 575 | 185 |
| | 150 | 300 | 485 | 600 | 197 |
| | 200 | 400 | 530 | 625 | 230 |
| | 250 | 450 | 575 | 650 | 260 |
| | 300 | 450 | 615 | 675 | 282 |
| | 350 | 450 | 660 | 700 | 310 |
| | 400 | 550 | 705 | 725 | 355 |
| | 450 | 550 | 750 | 750 | 387 |
| 500 | 150 | 300 | 495 | 625 | 241 |
| | 200 | 400 | 540 | 650 | 278 |
| | 250 | 450 | 585 | 675 | 310 |
| | 300 | 450 | 625 | 700 | 335 |
| | 350 | 450 | 670 | 725 | 364 |
| | 400 | 550 | 715 | 750 | 413 |
| | 450 | 650 | 760 | 775 | 446 |
| | 500 | 600 | 800 | 800 | 497 |
| 600 | 150 | 330 | 505 | 675 | 330 |
| | 200 | 400 | 550 | 700 | 375 |
| | 250 | 450 | 595 | 725 | 413 |
| | 300 | 450 | 635 | 750 | 441 |
| | 350 | 450 | 680 | 775 | 473 |
| | 400 | 550 | 725 | 800 | 532 |



● All Flange Radial Tee

| DN | dn | Type | L | K | Mass PN16 (Kg) |
|---|---|---|---|---|---|
| 600 | 450 | 600 | 770 | 825 | 580 |
| | 500 | 600 | 810 | 850 | 626 |
| | 600 | 700 | 900 | 900 | 748 |
| 700 | 200 | 400 | 550 | 750 | 500 |
| | 250 | 450 | 595 | 775 | 554 |
| | 300 | 450 | 635 | 800 | 591 |
| | 350 | 450 | 680 | 825 | 632 |
| | 400 | 550 | 725 | 850 | 715 |
| | 450 | 600 | 770 | 875 | 779 |
| | 500 | 600 | 810 | 900 | 835 |
| | 600 | 700 | 900 | 950 | 995 |
| | 700 | 800 | 1000 | 1000 | 1154 |
| 800 | 250 | 450 | 595 | 825 | 678 |
| | 300 | 450 | 635 | 850 | 719 |
| | 350 | 450 | 680 | 875 | 765 |
| | 400 | 550 | 725 | 900 | 861 |
| | 450 | 600 | 770 | 925 | 934 |
| | 500 | 600 | 810 | 950 | 995 |
| | 600 | 700 | 900 | 1000 | 1174 |
| | 700 | 800 | 1000 | 1050 | 1353 |
| | 800 | 900 | 1100 | 1100 | 1565 |
| 900 | 300 | 450 | 640 | 900 | 851 |
| | 350 | 450 | 685 | 925 | 907 |
| | 400 | 550 | 730 | 950 | 1013 |
| | 450 | 600 | 775 | 975 | 1101 |
| | 500 | 600 | 815 | 1000 | 1167 |
| | 600 | 700 | 905 | 1050 | 1366 |
| | 700 | 800 | 1005 | 1100 | 1568 |
| | 800 | 900 | 1105 | 1150 | 1802 |

| DN | dn | Type | L | K | Mass PN16 (Kg) |
|---|---|---|---|---|---|
| 900 | 900 | 1000 | 1200 | 1200 | 2047 |
| 1000 | 350 | 450 | 695 | 975 | 1103 |
| | 400 | 550 | 740 | 1000 | 1224 |
| | 450 | 600 | 785 | 1025 | 1323 |
| | 500 | 600 | 825 | 1050 | 1394 |
| | 600 | 700 | 915 | 1100 | 1616 |
| | 700 | 800 | 1015 | 1150 | 1841 |
| | 800 | 900 | 1115 | 1200 | 2099 |
| | 900 | 1000 | 1210 | 1250 | 2369 |
| | 1000 | 1100 | 1300 | 1300 | 2676 |
| 1100 | 400 | 550 | 750 | 1050 | 1416 |
| | 450 | 600 | 795 | 1075 | 1528 |
| | 500 | 600 | 835 | 1100 | 1605 |
| | 600 | 700 | 925 | 1150 | 1851 |
| | 700 | 800 | 1025 | 1200 | 2101 |
| | 800 | 900 | 1125 | 1250 | 2385 |
| | 900 | 1000 | 1220 | 1300 | 2678 |
| | 1000 | 1100 | 1310 | 1350 | 3012 |
| | 1100 | 1200 | 1400 | 1100 | 3353 |
| 1200 | 450 | 600 | 805 | 1125 | 1793 |
| | 500 | 600 | 845 | 1150 | 1877 |
| | 600 | 700 | 935 | 1200 | 2148 |
| | 700 | 800 | 1035 | 1250 | 2425 |
| | 800 | 900 | 1135 | 1300 | 2736 |
| | 900 | 1000 | 1230 | 1350 | 3056 |
| | 1000 | 1100 | 1320 | 1400 | 3417 |
| | 1100 | 1200 | 1410 | 1450 | 3785 |
| | 1200 | 1300 | 1500 | 1500 | 4200 |

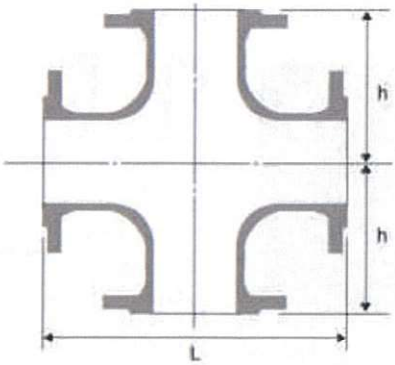


● All Flange Cross

| Body DN | Branch dn | L | h | Mass ( Kg ) PN10 | PN16 | PN25 |
|---|---|---|---|---|---|---|
| 80 | 80 | 330 | 165 | 20. 1 | 20. 1 | 20. 1 |
| 100 | 80 | 360 | 175 | 23 | 23 | 24. 2 |
| | 100 | 360 | 180 | 25 | 25 | 27. 1 |
| 150 | 80 | 440 | 205 | 33. 1 | 33. 1 | 36. 1 |
| | 100 | 440 | 210 | 35. 1 | 35. 1 | 38. 1 |
| | 150 | 440 | 220 | 41. 1 | 41. 1 | 46. 1 |
| 200 | 80 | 520 | 235 | 46. 5 | 45. 9 | 50. 7 |
| | 100 | 520 | 240 | 48. 5 | 46. 9 | 53. 7 |
| | 150 | 520 | 250 | 54. 5 | 53. 9 | 60. 7 |
| | 200 | 520 | 260 | 61. 5 | 60. 9 | 70. 7 |
| 250 | 80 | 700 | 265 | 37. 5 | 37. 5 | 44. 5 |
| | 100 | 700 | 275 | 74. 1 | 72. 9 | 81. 1 |
| | 150 | 700 | 300 | 82. 1 | 80. 9 | 93. 1 |
| | 200 | 700 | 325 | 90. 1 | 88. 9 | 101 |
| | 250 | 700 | 350 | 102 | 101 | 117 |
| 300 | 100 | 800 | 300 | 100 | 98. 8 | 112 |
| | 150 | 800 | 325 | 108 | 107 | 120 |
| | 200 | 800 | 350 | 116 | 115 | 130 |
| | 250 | 800 | 375 | 130 | 129 | 144 |
| | 300 | 800 | 400 | 144 | 143 | 164 |
| 350 | 100 | 850 | 325 | 122 | 128 | 145 |
| | 150 | 850 | 325 | 128 | 134 | 151 |
| | 200 | 850 | 325 | 132 | 140 | 159 |
| | 250 | 850 | 352 | 146 | 151 | 176 |
| | 300 | 850 | 425 | 154 | 160 | 187 |
| | 350 | 850 | 425 | 174 | 186 | 219 |
| 400 | 100 | 900 | 350 | 149 | 160 | 183 |
| | 150 | 900 | 350 | 151 | 164 | 191 |
| | 200 | 900 | 350 | 159 | 170 | 197 |
| | 250 | 900 | 350 | 160 | 174 | 225 |

| Body DN | Branch dn | L | h | Mass ( Kg ) PN10 | PN16 | PN25 |
|---|---|---|---|---|---|---|
| 400 | 300 | 900 | 450 | 182 | 220 | 236 |
| | 350 | 900 | 450 | 202 | 228 | 249 |
| | 400 | 900 | 450 | 211 | 234 | 259 |
| 450 | 100 | 950 | 375 | 186 | 203 | 235 |
| | 150 | 950 | 375 | 198 | 215 | 248 |
| | 200 | 950 | 375 | 213 | 230 | 265 |
| | 250 | 950 | 375 | 231 | 248 | 286 |
| | 300 | 950 | 475 | 253 | 270 | 312 |
| | 350 | 950 | 475 | 272 | 296 | 343 |
| | 400 | 950 | 475 | 296 | 324 | 378 |
| | 450 | 950 | 475 | 320 | 354 | 416 |
| 500 | 100 | 1000 | 400 | 215 | 247 | 272 |
| | 150 | 1000 | 400 | 223 | 251 | 280 |
| | 200 | 1000 | 400 | 225 | 255 | 284 |
| | 250 | 1000 | 400 | 231 | 281 | 301 |
| | 300 | 1000 | 500 | 249 | 275 | 316 |
| | 350 | 1000 | 500 | 273 | 290 | 338 |
| | 400 | 1000 | 500 | 279 | 317 | 364 |
| | 450 | 1000 | 500 | 293 | 361 | 396 |
| | 500 | 1000 | 500 | 299 | 359 | 406 |
| 600 | 100 | 1100 | 450 | 242 | 311 | 329 |
| | 150 | 1100 | 450 | 272 | 333 | 365 |
| | 200 | 1100 | 450 | 316 | 369 | 401 |
| | 250 | 1100 | 450 | 321 | 373 | 409 |
| | 300 | 1100 | 550 | 330 | 400 | 420 |
| | 350 | 1100 | 550 | 358 | 413 | 451 |
| | 400 | 1100 | 550 | 364 | 427 | 479 |
| | 450 | 1100 | 550 | 382 | 487 | 521 |
| | 500 | 1100 | 550 | 403 | 494 | 553 |
| | 600 | 1100 | 550 | 416 | 521 | 579 |

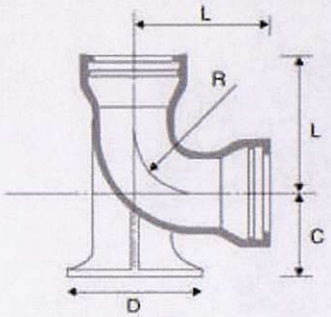


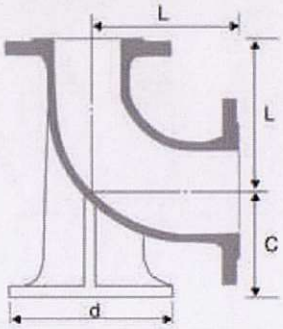


●Double Socket 90° Duck-foot Bend

| DN | L | C | D | Mass ( Kg ) |
|---|---|---|---|---|
| | | | | T-type |
| 100 | 120 | 125 | 200 | 14. 8 |
| 150 | 170 | 160 | 250 | 28. 5 |
| 200 | 220 | 190 | 300 | 44. 5 |
| 250 | 270 | 225 | 350 | 68. 5 |
| 300 | 320 | 255 | 400 | 100 |
| 350 | 370 | 290 | 450 | 133 |
| 400 | 420 | 320 | 500 | 180 |
| 450 | 470 | 355 | 550 | 230 |
| 500 | 520 | 385 | 600 | 294 |
| 600 | 620 | 450 | 700 | 442 |
| 700 | 720 | 515 | 800 | 618 |
| 800 | 820 | 580 | 900 | 832 |
| 900 | 920 | 645 | 1000 | 1113 |
| 1000 | 1020 | 710 | 1100 | 1435 |
| 1200 | 1220 | 840 | 1300 | 2153 |

●Double Flange 90° Duck-foot Bend

| DN | L | C | d | Mass ( Kg ) | | |
|---|---|---|---|---|---|---|
| | | | | PN10 | PN16 | PN25 |
| 100 | 180 | 125 | 200 | 17. 8 | 17. 8 | 18. 8 |
| 150 | 220 | 160 | 250 | 30 | 30 | 32 |
| 200 | 260 | 190 | 300 | 46. 5 | 46 | 50. 5 |
| 250 | 350 | 225 | 350 | 75 | 75 | 82 |
| 300 | 400 | 255 | 400 | 106 | 105 | 116 |
| 350 | 450 | 290 | 450 | 139 | 145 | 162 |
| 400 | 500 | 320 | 500 | 178 | 189 | 212 |
| 450 | 550 | 355 | 550 | 229 | 249 | 275 |
| 500 | 600 | 385 | 600 | 283 | 313 | 337 |
| 600 | 700 | 450 | 700 | 428 | 481 | 509 |
| 700 | 800 | 515 | 800 | 700 | 741 | 811 |
| 800 | 900 | 580 | 900 | 846 | 884 | 982 |
| 900 | 1000 | 645 | 1000 | 1118 | 1165 | 1286 |
| 1000 | 1100 | 710 | 1100 | 1698 | 1781 | 1937 |
| 1200 | 1300 | 840 | 1300 | 2599 | 2709 | |

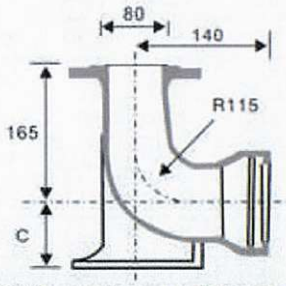


●80mm Flange and Socket 90° Short Hydrant Duckfoot Bends Class K12

| DN | C | Mass ( Kg ) |
|---|---|---|
| 80 | 95 | 12.5 |
| 100 | 105 | 15.9 |
| 150 | 130 | 21.5 |

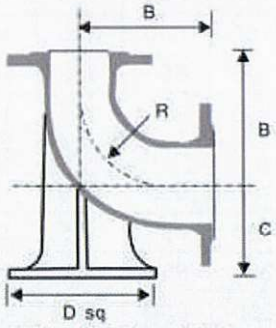


●Double Flanged 90° Hydrant Duckfoot Bends,Class K12

| DN | | B | C | D | Mass ( Kg ) |
|---|---|---|---|---|---|
| Body | Branch | | | | |
| 80 | 80 | 165 | 110 | 180 | 14 |
| 100 | 80 | 180 | 125 | 200 | 17 |
| 150 | 80 | 220 | 160 | 200 | 28 |

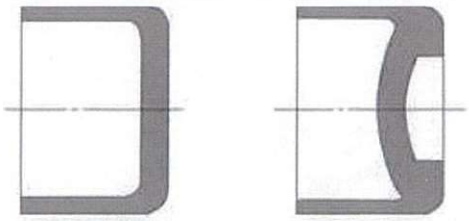

DN≤300 DN>300

Plug

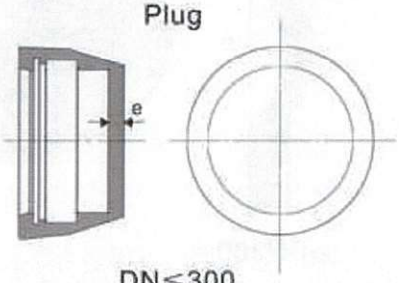


DN≤300

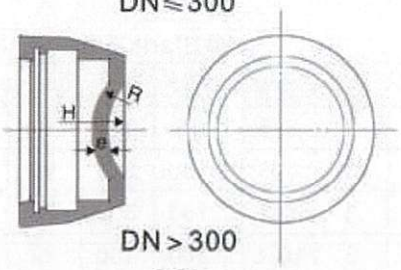


DN>300

Cap

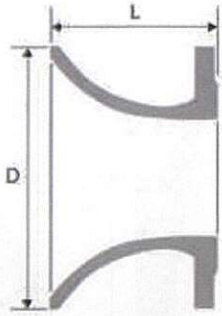


●Plug

| DN | Mass ( Kg ) | |
|---|---|---|
| | T | K |
| 100 | 4. 5 | 5. 7 |
| 150 | 9. 5 | 8. 8 |
| 200 | 14. 8 | 13 |
| 250 | 21. 5 | 17. 6 |
| 300 | 33. 5 | 25. 2 |
| 350 | 45. 5 | 32.7 |
| 400 | 56 | 42. 9 |
| 450 | 68. 5 | 52. 5 |
| 500 | 81 | 63. 6 |
| 600 | 112 | 88. 7 |
| 700 | 193 | 166 |
| 800 | 259 | 250 |
| 900 | 337 | 333 |
| 1000 | 437 | 434 |
| 1200 | 783 | 671 |
| 1400 | 1078 | 710 |
| 1600 | 1133 | 816 |
| 1800 | 1564 | 1123 |
| 2000 | | 1515 |

●Cap

| DN | Mass ( Kg ) | |
|---|---|---|
| | T | K |
| 100 | 8. 5 | 8. 5 |
| 150 | 14. 1 | 12. 3 |
| 200 | 19. 8 | 18. 4 |
| 250 | 27. 4 | 22 |
| 300 | 42. 8 | 34 |
| 350 | 61. 7 | 47. 3 |
| 400 | 76. 3 | 56 |
| 450 | 93. 7 | 70 |
| 500 | 107 | 83 |
| 600 | 132 | 138 |
| 700 | 202 | 170 |
| 800 | 275 | 225 |
| 900 | 353 | 300 |
| 1000 | 454 | 370 |
| 1200 | 613 | 580 |
| 1400 | 1018 | 1027 |
| 1600 | 1656 | 1441 |
| 1800 | 2165 | 1941 |
| 2000 | | 2541 |

●Bell Mouth

| DN | L | D | Mass ( Kg ) | | |
|---|---|---|---|---|---|
| | | | PN10 | PN16 | PN25 |
| 80 | 135 | 160 | 5.2 | 5.2 | 5.2 |
| 100 | 140 | 185 | 6.2 | 6.2 | 6.7 |
| 150 | 155 | 245 | 10.1 | 10.1 | 11.1 |
| 200 | 170 | 310 | 15 | 148 | 16.8 |
| 250 | 190 | 370 | 21 | 20.5 | 24.5 |
| 300 | 210 | 435 | 28.5 | 28.5 | 33.5 |
| 350 | 225 | 495 | 35.5 | 38 | 46 |
| 400 | 245 | 560 | 45 | 49.5 | 60.5 |
| 450 | 260 | 620 | 54 | 62 | 73 |
| 500 | 280 | 685 | 67 | 80 | 91 |
| 600 | 300 | 810 | 96.5 | 120 | 132 |
| 700 | 340 | 945 | 135 | 146 | 178.5 |
| 800 | 380 | 1055 | 182 | 197 | 243 |
| 900 | 420 | 1165 | 231 | 250 | 306 |
| 1000 | 440 | 1290 | 297 | 331 | 404 |
| 1200 | 490 | 1515 | 457 | 512 | 603 |
| 1400 | 515 | 1725 | 646 | 702 | 842 |
| 1600 | 540 | 1945 | 906 | 995 | 1156 |
| 1800 | | | 1185 | 1297 | 1514 |
| 2000 | | | 1530 | 1668 | 1990 |

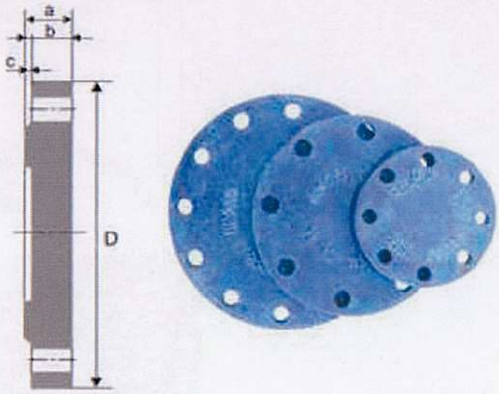


DN50~DN250

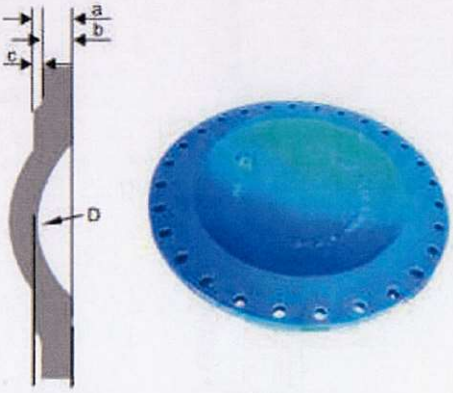


≥DN300

●Blank FlangePN10

| DN | D | a | b | c | Mass (Kg) |
|---|---|---|---|---|---|
| 80 | 200 | 19 | 16 | 3 | 3.5 |
| 100 | 220 | 19 | 16 | 3 | 4.3 |
| 150 | 285 | 19 | 16 | 3 | 7.2 |
| 200 | 340 | 20 | 17 | 3 | 11.0 |
| 250 | 400 | 22 | 19 | 3 | 16.9 |
| 300 | 455 | 24.5 | 20.5 | 4 | 24.0 |
| 350 | 505 | 24.5 | 20.5 | 4 | 29.5 |
| 400 | 565 | 24.5 | 20.5 | 4 | 36.5 |
| 450 | 615 | 25.5 | 21.5 | 4 | 46.5 |
| 500 | 670 | 26.5 | 22.5 | 4 | 56.0 |
| 600 | 780 | 30 | 25 | 5 | 85.0 |
| 700 | 895 | 32.5 | 27.5 | 5 | 123 |
| 800 | 1015 | 35 | 30 | 5 | 172 |
| 900 | 1115 | 37.5 | 32.5 | 5 | 224 |
| 1000 | 1230 | 40 | 35 | 5 | 293 |
| 1200 | 1455 | 45 | 40 | 5 | 575 |
| 1400 | 1675 | 46 | 41 | 5 | 739 |
| 1600 | 1915 | 49 | 44 | 5 | 1239 |
| 1800 | 2115 | 52 | 47 | 5 | 1717 |
| 2000 | 2325 | 55 | 50 | 5 | 2272 |

●Blank FlangePN16

| DN | D | a | b | c | Mass (Kg) |
|---|---|---|---|---|---|
| 80 | 200 | 19 | 16 | 3 | 3.5 |
| 100 | 220 | 19 | 16 | 3 | 4.3 |
| 150 | 285 | 19 | 16 | 3 | 7.2 |
| 200 | 340 | 20 | 17 | 3 | 10.8 |
| 250 | 400 | 22 | 19 | 3 | 16.6 |
| 300 | 455 | 24.5 | 20.5 | 4 | 23.5 |
| 350 | 520 | 26.5 | 22.5 | 4 | 33.5 |
| 400 | 580 | 28 | 24 | 4 | 44.5 |
| 450 | 640 | 30 | 26 | 4 | 63.5 |
| 500 | 715 | 31.5 | 27.5 | 4 | 77.0 |
| 600 | 840 | 36 | 31 | 5 | 121 |
| 700 | 910 | 39.5 | 34.5 | 5 | 156 |
| 800 | 1025 | 43 | 38 | 5 | 218 |
| 900 | 1125 | 46.5 | 41.5 | 5 | 286 |
| 1000 | 1255 | 50 | 45 | 5 | 387 |
| 1200 | 1485 | 57 | 52 | 5 | 662 |
| 1400 | 1685 | 60 | 55 | 5 | 994 |
| 1600 | 1930 | 65 | 60 | 5 | 1409 |
| 1800 | 2130 | 70 | 65 | 5 | 1858 |
| 2000 | 2345 | 75 | 70 | 5 | 2407 |

●Blank FlangePN25

| DN | D | a | b | c | Mass (Kg) |
|---|---|---|---|---|---|
| 80 | 200 | 19 | 16 | 3 | 3.5 |
| 100 | 235 | 19 | 16 | 3 | 4.8 |
| 150 | 300 | 20 | 17 | 3 | 8.3 |
| 200 | 360 | 22 | 19 | 3 | 13.3 |
| 250 | 425 | 24.5 | 21.5 | 3 | 21.0 |
| 300 | 485 | 27.5 | 23.5 | 4 | 30.0 |
| 350 | 555 | 30 | 26 | 4 | 43.5 |
| 400 | 620 | 32 | 28 | 4 | 58.0 |
| 450 | 670 | 34.5 | 30.5 | 4 | 79.0 |
| 500 | 730 | 36.5 | 32.5 | 4 | 94.0 |
| 600 | 845 | 42 | 37 | 5 | 144 |

●Blank FlangePN40

| DN | D | a | b | c | Mass (Kg) |
|---|---|---|---|---|---|
| 80 | 200 | 19 | 16 | 19 | 3.7 |
| 100 | 235 | 19 | 16 | 19 | 5.1 |
| 150 | 300 | 26 | 23 | 26 | 11.4 |
| 200 | 375 | 30 | 27 | 30 | 20.5 |
| 250 | 450 | 34.5 | 31.5 | 34.5 | 34.5 |
| 300 | 515 | 39.5 | 35.5 | 39.5 | 51 |
| 350 | 580 | 44 | 40 | 44 | 74 |
| 400 | 660 | 48 | 44 | 48 | 106 |
| 450 | 685 | 50 | 46 | 50 | 118 |
| 500 | 755 | 52 | 48 | 52 | 150 |
| 600 | 845 | 58 | 53 | 58 | 232 |

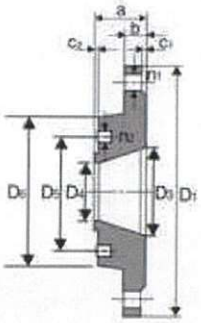


● Reducing Flange

| DN | dn | PN16 | | | | | | | | | | | Mass (Kg) |
|---|---|---|---|---|---|---|---|---|---|---|---|---|---|
| | | D1 | D2 | D3 | D4 | D5 | D6 | n1 | n2 | Ød | M | a | |
| 200 | 80 | 340 | 295 | 118 | 84 | 160 | 200 | 12 | 8 | 23 | 16 | 39 | 13. 0 |
| | 100 | 340 | 295 | 144 | 104 | 180 | 220 | 12 | 8 | 23 | 16 | 39 | 13. 0 |
| 250 | 100 | 400 | 355 | 148 | 104 | 180 | 220 | 12 | 8 | 28 | 16 | 41 | 18. 6 |
| | 150 | 455 | 355 | 200 | 154 | 240 | 285 | 12 | 8 | 28 | 20 | 43 | 18. 8 |
| 300 | 100 | 455 | 410 | 148 | 104 | 180 | 220 | 12 | 8 | 28 | 16 | 44 | 26. 3 |
| | 150 | 455 | 410 | 200 | 154 | 240 | 285 | 12 | 8 | 28 | 20 | 44 | 25. 9 |
| | 200 | 520 | 410 | 250 | 205 | 295 | 340 | 12 | 12 | 28 | 20 | 45 | 24. 7 |
| 350 | 200 | 520 | 470 | 250 | 205 | 295 | 340 | 16 | 12 | 28 | 20 | 46 | 32. 6 |
| | 250 | 520 | 470 | 303 | 254 | 355 | 400 | 16 | 12 | 28 | 24 | 48 | 36. 5 |
| 400 | 100 | 580 | 525 | 148 | 104 | 180 | 220 | 16 | 8 | 31 | 16 | 47 | 46. 0 |
| | 150 | 580 | 525 | 205 | 155 | 240 | 285 | 16 | 8 | 31 | 20 | 47 | 44. 8 |
| | 200 | 580 | 525 | 270 | 205 | 295 | 340 | 16 | 12 | 31 | 20 | 48 | 42. 4 |
| | 300 | 580 | 525 | 354 | 309 | 410 | 455 | 16 | 12 | 31 | 24 | 52 | 44. 5 |
| 500 | 100 | 715 | 650 | 148 | 104 | 180 | 220 | 20 | 8 | 34 | 16 | 50 | 82. 7 |
| | 150 | 715 | 650 | 203 | 155 | 240 | 285 | 20 | 8 | 34 | 20 | 50 | 81. 3 |
| | 200 | 715 | 650 | 250 | 205 | 295 | 340 | 20 | 12 | 34 | 20 | 50 | 79. 0 |
| | 300 | 715 | 650 | 354 | 309 | 400 | 455 | 20 | 12 | 34 | 24 | 56 | 74. 7 |
| | 400 | 715 | 650 | 464 | 409 | 525 | 580 | 20 | 16 | 34 | 27 | 60 | 69. 6 |
| 600 | 100 | 840 | 770 | 148 | 104 | 180 | 220 | 20 | 8 | 37 | 16 | 55 | 130. 7 |
| | 200 | 840 | 770 | 250 | 205 | 295 | 340 | 20 | 12 | 37 | 20 | 56 | 126. 6 |
| | 300 | 840 | 770 | 354 | 309 | 410 | 455 | 20 | 12 | 37 | 24 | 60 | 119. 1 |
| | 400 | 840 | 770 | 464 | 409 | 525 | 580 | 20 | 16 | 37 | 27 | 64 | 112. 6 |
| 800 | 100 | 1025 | 950 | 148 | 104 | 180 | 220 | 24 | 8 | 40 | 16 | 62 | 235. 0 |
| | 150 | 1025 | 950 | 205 | 155 | 240 | 295 | 24 | 8 | 40 | 20 | 62 | 233. 0 |
| | 200 | 1025 | 950 | 250 | 205 | 295 | 340 | 24 | 12 | 40 | 20 | 63 | 229. 3 |
| | 300 | 1025 | 950 | 354 | 309 | 410 | 455 | 24 | 12 | 40 | 24 | 67 | 220. 5 |
| | 400 | 1025 | 950 | 464 | 409 | 525 | 580 | 24 | 16 | 40 | 27 | 70 | 209. 1 |
| | 450 | 1025 | 950 | 515 | 455 | 585 | 640 | 24 | 20 | 40 | 27 | 73 | 205. 6 |
| | 500 | 1025 | 950 | 566 | 508 | 650 | 715 | 24 | 20 | 40 | 30 | 74 | 200. 9 |
| | 600 | 1025 | 950 | 670 | 608 | 770 | 840 | 24 | 20 | 40 | 33 | 79 | 191. 1 |

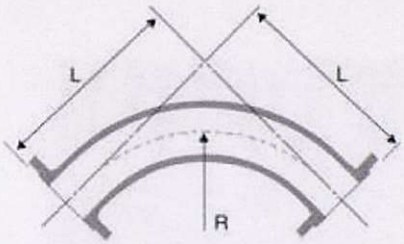


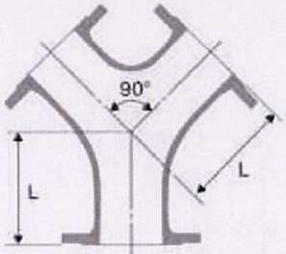


● Double Flange 90° Long Radius Bend

| DN | L | R | Mass (Kg) |
|---|---|---|---|
| 80 | 380 | 330 | 14 |
| 100 | 400 | 340 | 18 |
| 150 | 450 | 385 | 30 |
| 200 | 500 | 430 | 46 |
| 250 | 550 | 475 | 65 |
| 300 | 600 | 515 | 90 |
| 350 | 650 | 560 | 121 |
| 400 | 700 | 605 | 157 |
| 450 | 750 | 650 | 197 |
| 500 | 800 | 690 | 252 |
| 600 | 900 | 780 | 379 |

● All Flanged Y Pipe

| DN | L | Mass (Kg) |
|---|---|---|
| 80 | 165 | 15.6 |
| 100 | 180 | 19.3 |
| 150 | 220 | 32.5 |
| 200 | 260 | 49 |
| 250 | 350 | 81 |
| 300 | 400 | 115 |
| 350 | 450 | 166 |
| 400 | 500 | 231 |
| 450 | 550 | 295 |
| 500 | 600 | 385 |
| 600 | 700 | 591 |

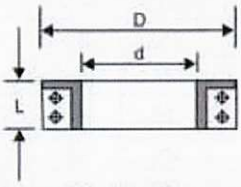


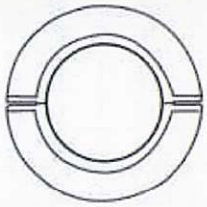

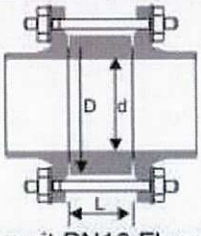


● Loose Puddle Flanges (for use on spun pipe only)

| DN | D | L | d | Mass (Kg) |
|---|---|---|---|---|
| 80 | 260 | 110 | 100 | 11.5 |
| 100 | 305 | 110 | 120 | 14.5 |
| 150 | 390 | 130 | 172 | 23 |
| 200 | 430 | 130 | 224 | 28 |
| 250 | 490 | 130 | 276 | 37 |
| 300 | 555 | 130 | 329 | 46 |
| 350 | 610 | 130 | 381 | 50 |
| 400 | 660 | 150 | 432 | 62 |
| 450 | 725 | 150 | 483 | 73 |
| 500 | 790 | 150 | 535 | 85 |
| 600 | 900 | 165 | 638 | 120 |
| 700 | 1000 | 165 | 746 | 144 |
| 800 | 1100 | 185 | 850 | 189 |
| 900 | 1200 | 185 | 953 | 221 |
| 1000 | 1340 | 200 | 1056 | 342 |
| 1200 | 1570 | 225 | 1263 | 487 |
| 1400 | 1780 | 225 | 1470 | 634 |
| 1600 | 1996 | 225 | 1686 | 702 |

● Pipe Blocks to suit PN16 Flanges

| DN | d | D | L (Min) | L (Max) | Mass (Kg)/m |
|---|---|---|---|---|---|
| 80 | 76 | 133 | 15 | 105 | 6.6 |
| 100 | 100 | 153 | 15 | 120 | 7.4 |
| 150 | 150 | 209 | 15 | 130 | 11.8 |
| 200 | 200 | 264 | 15 | 140 | 16.5 |
| 250 | 250 | 319 | 20 | 155 | 22 |
| 300 | 300 | 367 | 20 | 170 | 25 |
| 350 | 350 | 432 | 20 | 180 | 35.5 |
| 400 | 400 | 484 | 20 | 195 | 41 |
| 450 | 450 | 544 | 20 | 205 | 52 |
| 500 | 500 | 606 | 20 | 220 | 65 |
| 600 | 600 | 721 | 30 | 245 | 89 |
| 700 | 704 | 791 | 30 | 245 | 75 |
| 800 | 802 | 898 | 30 | 245 | 94 |
| 900 | 897 | 998 | 30 | 250 | 109 |
| 1000 | 1003 | 1115 | 35 | 270 | 127 |
| 1200 | 1203 | 1328 | 35 | 310 | 175 |
| 1400 | 1404 | 1530 | 40 | 375 | 205 |
| 1600 | 1604 | 1750 | 40 | 375 | 271 |

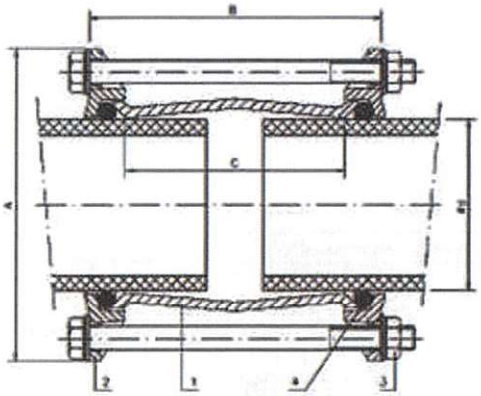

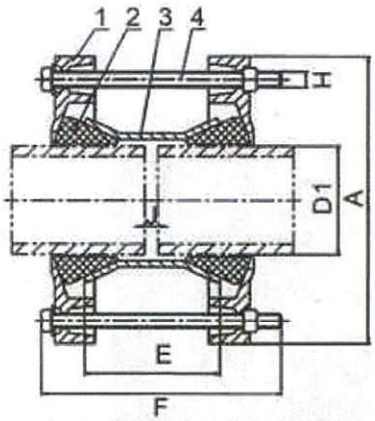


Components and materials

| No | Name of accessories | Material of accessories |
|---|---|---|
| 1 | End ring | GGG-50 |
| 2 | Seal | EPDM |
| 3 | Coupling | GGG-50 |
| 4 | Bolt/nuts | Steel 6.8+Dacroment 500 |

| PART | DESCRIPTION | MATERIAL |
|---|---|---|
| 1 | COUPLING | GGG-50 |
| 2 | COUNTERFLANGE | GGG-50 |
| 3 | BOLT/NUTS | Steel6.8 GEOMET |
| 4 | GASKET | EPDM |

● Gibault coupling for PVC pipe

| Ød | A | B | C |
|---|---|---|---|
| 50 | 116 | 131 | 97 |
| 63 | 137 | 150 | 116 |
| 75 | 149 | 154 | 116 |
| 90 | 164 | 154 | 116 |
| 110 | 184 | 175 | 137 |
| 125 | 199 | 1758 | 137 |
| 140 | 214 | 179 | 137 |
| 160 | 234 | 215 | 177 |
| 180 | 254 | 215 | 177 |
| 200 | 274 | 219 | 177 |
| 150 | 341 | 241 | 177 |
| 315 | 406 | 241 | 185 |
| 400 | 495 | 243 | 181 |
| 500 | 592 | 243 | 181 |
| 630 | 753 | 243 | 181 |

● Universal Coupling

| DI (Min) | DI (Max) | E | F | A | J (Min) | J (Max) | Mass (kg) |
|---|---|---|---|---|---|---|---|
| 47 | 60 | 100 | 190 | 169 | 10 | 40 | 5 |
| 57 | 72 | 106 | 210 | 195 | 10 | 45 | 5.2 |
| 68 | 85 | 106 | 210 | 207 | 10 | 45 | 5.2 |
| 84 | 106 | 106 | 210 | 224 | 10 | 45 | 5.6 |
| 103 | 116 | 106 | 210 | 250 | 10 | 45 | 6.5 |
| 108 | 130 | 106 | 230 | 250 | 10 | 45 | 7 |
| 128 | 146 | 106 | 230 | 276 | 10 | 45 | 9 |
| 134 | 155 | 106 | 230 | 276 | 10 | 45 | 10 |
| 153 | 175 | 106 | 230 | 304 | 10 | 45 | 11 |
| 165 | 185 | 106 | 230 | 304 | 10 | 45 | 11 |
| 184 | 207 | 130 | 260 | 330 | 10 | 70 | 13 |
| 208 | 225 | 130 | 260 | 348 | 10 | 70 | 14 |
| 218 | 236 | 150 | 260 | 359 | 10 | 90 | 16 |
| 222 | 250 | 130 | 260 | 373 | 10 | 70 | 18 |
| 246 | 270 | 150 | 300 | 394 | 10 | 90 | 18.5 |
| 264 | 284 | 130 | 260 | 407 | 10 | 70 | 22 |
| 282 | 306 | 150 | 300 | 433 | 10 | 90 | 23 |
| 305 | 326 | 130 | 260 | 459 | 10 | 70 | 24.2 |
| 315 | 335 | 150 | 300 | 463 | 10 | 90 | 28 |
| 334 | 355 | 150 | 300 | 483 | 10 | 90 | 33 |
| 360 | 386 | 130 | 300 | 510 | 10 | 70 | 36 |
| 386 | 410 | 150 | 300 | 538 | 10 | 90 | 38 |
| 408 | 435 | 130 | 300 | 559 | 10 | 70 | 42 |
| 425 | 448 | 150 | 300 | 584 | 10 | 90 | 46 |
| 465 | 490 | 180 | 330 | 628 | 10 | 120 | 49 |

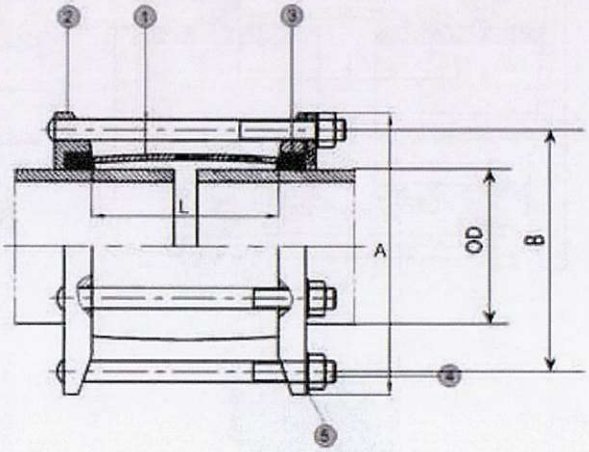


## ●Material Specification:

| Item No. | Part Name | Material | Specification |
|---|---|---|---|
| 1 | Center Slrrve | Ductile Iron | EN1563 |
| 2 | End Ring | Ductile Iron | EN1563 |
| 3 | Rubber Seal | Rubber | ISO4633 |
| 4 | Bolt/nut | Zinc Plated Steel | ISO898 |
| 5 | Washer | Zinc Plated Steel | ISO898 |

Features

- Ductile Iron GGG50 material with FBE coated.
- PN10,PN16,PN25,PN40 Working pressure.
- Equipped with galvanized steel bolts,nuts.
- EPDM or NBR rubber seals.
- Suitable for Ductile Iron Pipes.

## ●Flexible Coupling for Ductile Iron Pipe

| DN | Pipe O.D | A | B | L | Bolts Nr. | Bolts Size (M×L) | Mass (kg) |
|---|---|---|---|---|---|---|---|
| 80 | 98 | 194 | 157 | 102 | 4 | M12×180 | 5.6 |
| 100 | 118 | 214 | 178 | 102 | 4 | M12×180 | 6.5 |
| 150 | 170 | 270 | 236 | 102 | 4 | M12×180 | 10.5 |
| 200 | 222 | 328 | 292 | 102 | 6 | M12×180 | 14 |
| 250 | 274 | 376 | 341 | 102 | 6 | M12×180 | 18.5 |
| 300 | 326 | 434 | 397 | 102 | 6 | M12×180 | 20.6 |
| 350 | 378 | 498 | 460 | 152 | 6 | M16×240 | 35.8 |
| 400 | 429 | 555 | 515 | 152 | 8 | M16×240 | 41.6 |
| 450 | 480 | 616 | 580 | 152 | 8 | M16×240 | 51 |

| DN | Pipe O.D | A | B | L | Bolts Nr. | Bolts Size (M×L) | Mass (kg) |
|---|---|---|---|---|---|---|---|
| 500 | 532 | 660 | 620 | 152 | 8 | M16×240 | 55 |
| 600 | 635 | 755 | 715 | 152 | 8 | M16×240 | 79 |
| 700 | 738 | 866 | 826 | 152 | 10 | M16×240 | 94 |
| 800 | 842 | 965 | 925 | 152 | 10 | M16×300 | 121 |
| 900 | 945 | 1075 | 1026 | 178 | 12 | M16×300 | 163 |
| 1000 | 1048 | 1186 | 1140 | 178 | 12 | M16×300 | 176 |
| 1100 | 1152 | 1300 | 1260 | 178 | 14 | M16×300 | 230 |
| 1200 | 1255 | 1400 | 1353 | 178 | 14 | M16×300 | 258 |
| 1400 | 1462 | 1616 | 1570 | 178 | 16 | M20×300 | 378 |
| 1600 | 1668 | 1830 | 1780 | 178 | 18 | M20×300 | 427 |

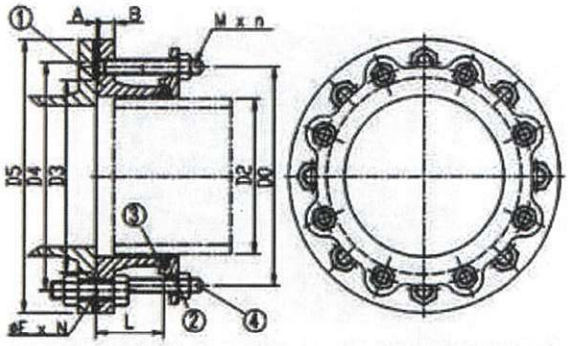


## ●Material Specification:

| Item No. | Part Name | Material | Specification |
|---|---|---|---|
| 1 | Body | Ductile Iron | EN1563 |
| 2 | End Ring | Ductile Iron | EN1563 |
| 3 | Rubber | Rubber | ISO4633 |
| 4 | Bolt/nut | Zinc Plated Steel | ISO898 |

Features

- Ductile Iron GGG50 material with FBE coated.
- PN10,PN16,PN25,PN40 Working pressure.
- Equipped with galvanized steel bolts,nuts.
- EPDM or NBR rubber seals.
- Suitable for Ductile Iron Pipes.

## ●Flange adaptor for ductile iron pipe,PN10

| DN | D2 | D3 | D4 | D5 | D0 | L | A | B | ØE | N | M | n |
|---|---|---|---|---|---|---|---|---|---|---|---|---|
| DN80 | 98 | 132 | 160 | 200 | 157 | 73 | 3 | 16.0 | 19 | 8 | M12 | 4 |
| DN100 | 118 | 156 | 180 | 220 | 178 | 73 | 3 | 16.0 | 19 | 8 | M12 | 4 |
| DN125 | 144 | 184 | 210 | 250 | 166 | 76 | 3 | 16.0 | 19 | 8 | M12 | 4 |
| DN150 | 170 | 211 | 240 | 285 | 236 | 77 | 3 | 16.0 | 23 | 8 | M12 | 4 |
| DN200 | 222 | 266 | 295 | 340 | 292 | 78 | 3 | 17.0 | 23 | 8 | M12 | 4 |
| DN250 | 274 | 319 | 350 | 410 | 341 | 92 | 3 | 19.0 | 23 | 12 | M12 | 6 |
| DN300 | 326 | 370 | 400 | 455 | 397 | 93 | 4 | 20.5 | 23 | 12 | M16 | 6 |
| DN350 | 378 | 429 | 460 | 505 | 460 | 111 | 4 | 20.5 | 23 | 16 | M16 | 8 |
| DN400 | 429 | 480 | 515 | 565 | 515 | 112 | 4 | 20.5 | 28 | 16 | M16 | 8 |
| DN450 | 480 | 530 | 565 | 615 | 580 | 113 | 4 | 21.5 | 28 | 20 | M16 | 10 |
| DN500 | 532 | 582 | 620 | 670 | 620 | 115 | 4 | 22.5 | 28 | 20 | M16 | 10 |
| DN600 | 635 | 682 | 725 | 780 | 715 | 115 | 5 | 25.0 | 31 | 20 | M16 | 10 |
| DN700 | 738 | 794 | 840 | 895 | 826 | 115 | 5 | 27.5 | 31 | 24 | M16 | 12 |
| DN800 | 842 | 901 | 950 | 1015 | 925 | 115 | 5 | 30.0 | 34 | 24 | M16 | 12 |
| DN900 | 945 | 1001 | 1050 | 1115 | 1026 | 115 | 5 | 32.5 | 34 | 28 | M16 | 14 |
| DN1000 | 1048 | 1112 | 1160 | 1230 | 1140 | 130 | 5 | 35.0 | 37 | 28 | M16 | 14 |
| DN1100 | 1152 | 1218 | 1270 | 1340 | 1260 | 130 | 5 | 37.5 | 37 | 32 | M16 | 16 |
| DN1200 | 1255 | 1328 | 1380 | 1455 | 1353 | 130 | 5 | 40.0 | 40 | 32 | M16 | 16 |
| DN1400 | 1462 | 1530 | 1590 | 1675 | 1570 | 130 | 5 | 41.0 | 43 | 36 | M16 | 18 |
| DN1500 | 1565 | 1640 | 1700 | 1785 | 1670 | 180 | 5 | 42.5 | 43 | 36 | M16 | 18 |
| DN1600 | 1668 | 1750 | 1820 | 1915 | 1790 | 180 | 5 | 44.0 | 49 | 40 | M16 | 20 |

## ●Flange adaptor for ductile iron pipe,PN40

| DN | D2 | D3 | D4 | D5 | D0 | L | A | B | ØE | N | M | n |
|---|---|---|---|---|---|---|---|---|---|---|---|---|
| DN80 | 98 | 132 | 160 | 200 | 157 | 73 | 3 | 16.0 | 19 | 8 | M12 | 4 |
| DN100 | 118 | 156 | 190 | 235 | 178 | 73 | 3 | 16.0 | 23 | 8 | M12 | 4 |
| DN125 | 144 | 184 | 220 | 270 | 166 | 76 | 3 | 20.5 | 28 | 8 | M12 | 4 |
| DN150 | 170 | 211 | 250 | 300 | 236 | 77 | 3 | 23.0 | 28 | 8 | M12 | 4 |
| DN200 | 222 | 284 | 320 | 375 | 292 | 78 | 3 | 27.0 | 31 | 12 | M12 | 6 |
| DN250 | 274 | 345 | 385 | 450 | 341 | 92 | 3 | 31.5 | 34 | 12 | M12 | 6 |
| DN300 | 326 | 409 | 450 | 515 | 397 | 93 | 4 | 35.5 | 34 | 16 | M12 | 8 |
| DN350 | 378 | 465 | 510 | 580 | 460 | 111 | 4 | 44.0 | 37 | 16 | M16 | 8 |
| DN400 | 429 | 535 | 585 | 660 | 515 | 112 | 4 | 48.0 | 40 | 16 | M16 | 8 |
| DN500 | 532 | 615 | 670 | 755 | 620 | 115 | 4 | 52.0 | 43 | 20 | M16 | 10 |
| DN600 | 635 | 735 | 795 | 890 | 715 | 115 | 5 | 58.0 | 49 | 20 | M16 | 10 |

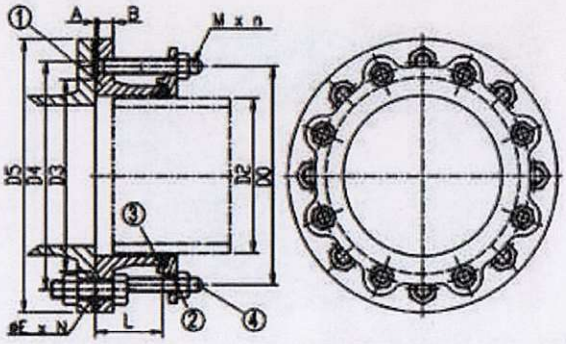


● Flange adaptor for ductile iron pipe,PN16

| DN | D2 | D3 | D4 | D5 | D0 | L | A | B | ØE | N | M | n | Mass(kg) |
|---|---|---|---|---|---|---|---|---|---|---|---|---|---|
| DN80 | 98 | 132 | 160 | 200 | 157 | 73 | 3 | 16.0 | 19 | 8 | M12 | 4 | 7.3 |
| DN100 | 118 | 156 | 180 | 220 | 178 | 73 | 3 | 16.0 | 19 | 8 | M12 | 4 | 7.9 |
| DN125 | 144 | 184 | 210 | 250 | 166 | 76 | 3 | 16.0 | 19 | 8 | M12 | 4 | 12 |
| DN150 | 170 | 211 | 240 | 285 | 236 | 77 | 3 | 16.0 | 23 | 8 | M12 | 4 | 13.3 |
| DN200 | 222 | 266 | 295 | 340 | 292 | 78 | 3 | 17.0 | 23 | 12 | M12 | 6 | 18.4 |
| DN250 | 274 | 319 | 355 | 400 | 341 | 92 | 3 | 19.0 | 28 | 12 | M12 | 6 | 25.3 |
| DN300 | 326 | 370 | 410 | 455 | 397 | 93 | 4 | 20.5 | 28 | 12 | M12 | 6 | 30.5 |
| DN350 | 378 | 432 | 470 | 520 | 460 | 111 | 4 | 22.2 | 28 | 16 | M16 | 8 | 42.6 |
| DN400 | 429 | 480 | 525 | 580 | 515 | 112 | 4 | 24.0 | 31 | 16 | M16 | 8 | 56.4 |
| DN450 | 480 | 548 | 585 | 640 | 580 | 113 | 4 | 26.0 | 31 | 20 | M16 | 10 | 68 |
| DN500 | 532 | 609 | 650 | 715 | 620 | 115 | 4 | 27.5 | 34 | 20 | M16 | 10 | 77 |
| DN600 | 635 | 720 | 770 | 840 | 715 | 115 | 5 | 31.0 | 37 | 20 | M16 | 10 | 93 |
| DN700 | 738 | 794 | 840 | 910 | 826 | 115 | 5 | 34.5 | 37 | 24 | M16 | 12 | 121 |
| DN800 | 842 | 901 | 950 | 1025 | 925 | 115 | 5 | 38.0 | 40 | 24 | M16 | 12 | 138 |
| DN900 | 945 | 1001 | 1050 | 1125 | 1026 | 115 | 5 | 41.5 | 40 | 28 | M16 | 14 | 174 |
| DN1000 | 1048 | 1112 | 1170 | 1255 | 1140 | 130 | 5 | 45.0 | 43 | 28 | M16 | 14 | 202 |
| DN1100 | 1152 | 1218 | 1270 | 1355 | 1260 | 130 | 5 | 48.5 | 43 | 32 | M16 | 16 | 296 |
| DN1200 | 1255 | 1328 | 1390 | 1485 | 1353 | 130 | 5 | 52.0 | 49 | 32 | M16 | 16 | 378 |
| DN1400 | 1462 | 1530 | 1590 | 1685 | 1570 | 130 | 5 | 55.0 | 49 | 36 | M16 | 18 | 575 |
| DN1600 | 1668 | 1750 | 1820 | 1930 | 1790 | 180 | 5 | 60 | 56 | 40 | M16 | 20 | 855 |

● Flange adaptor for ductile iron pipe,PN25

| DN | D2 | D3 | D4 | D5 | D0 | L | A | B | ØE | N | M | n | Mass(kg) |
|---|---|---|---|---|---|---|---|---|---|---|---|---|---|
| DN80 | 98 | 132 | 160 | 200 | 157 | 73 | 3 | 16.0 | 19 | 8 | M12 | 4 | 7.3 |
| DN100 | 118 | 156 | 190 | 235 | 178 | 73 | 3 | 16.0 | 23 | 8 | M12 | 4 | 8.5 |
| DN125 | 144 | 184 | 220 | 270 | 166 | 76 | 3 | 20.5 | 28 | 8 | M12 | 4 | 14 |
| DN150 | 170 | 211 | 250 | 300 | 236 | 77 | 3 | 23.0 | 28 | 8 | M12 | 4 | 15 |
| DN200 | 222 | 274 | 310 | 360 | 292 | 78 | 3 | 27.0 | 31 | 12 | M12 | 6 | 22 |
| DN250 | 274 | 330 | 370 | 425 | 341 | 92 | 3 | 31.5 | 34 | 12 | M12 | 6 | 32 |
| DN300 | 326 | 389 | 430 | 485 | 397 | 93 | 4 | 35.5 | 34 | 16 | M12 | 8 | 38 |
| DN350 | 378 | 448 | 490 | 555 | 460 | 111 | 4 | 44.0 | 37 | 16 | M16 | 8 | 55 |
| DN400 | 429 | 503 | 550 | 620 | 515 | 112 | 4 | 48.0 | 40 | 16 | M16 | 8 | 73 |
| DN500 | 532 | 609 | 660 | 730 | 620 | 115 | 4 | 52.0 | 43 | 20 | M16 | 10 | 96 |
| DN600 | 635 | 720 | 770 | 845 | 715 | 115 | 5 | 58.0 | 49 | 20 | M16 | 10 | 118 |
| DN700 | 738 | 820 | 875 | 960 | 826 | 115 | 5 | 41.5 | 43 | 24 | M16 | 12 | 166 |
| DN800 | 842 | 928 | 990 | 1085 | 925 | 115 | 5 | 46 | 49 | 24 | M16 | 12 | 198 |
| DN900 | 945 | 1028 | 1090 | 1180 | 1026 | 115 | 5 | 50.5 | 49 | 28 | M16 | 14 | 248 |
| DN1000 | 1048 | 1140 | 1210 | 1320 | 1140 | 130 | 5 | 55 | 56 | 28 | M16 | 14 | 296 |
| DN1200 | 1255 | 1350 | 1420 | 1530 | 1353 | 130 | 5 | 64 | 56 | 32 | M16 | 16 | 488 |
| DN1400 | 1462 | 1560 | 1640 | 1755 | 1570 | 130 | 5 | 69 | 62 | 36 | M16 | 18 | 696 |
| DN1600 | 1668 | 1780 | 1860 | 1975 | 1790 | 180 | 5 | 76 | 62 | 40 | M16 | 20 | / |

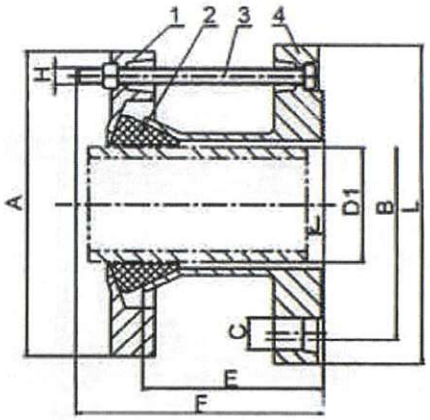


Components and materials

| No | Name of accessories | Material of accessories |
|---|---|---|
| 1 | End ring | GGG-50 |
| 2 | Seal | EPDM |
| 3 | Screw | Steel 6.8+Dacroment 500 |
| 4 | Flange adaptor | GGG-50 |

● Universal flange adaptor

| DN | DI (Min) | DI (Max) | L | A | B | C | E | F | A | J (Min) | J (Max) | Mass(kg) |
|---|---|---|---|---|---|---|---|---|---|---|---|---|
| 40/50 | 47 | 60 | 155 | 16 | 100/125 | 19 | 75 | 140 | 169 | 10 | 45 | 7 |
| 50/65 | 57 | 72 | 194 | 19 | 114/147 | 19 | 85 | 140 | 195 | 10 | 55 | 7 |
| 65 | 68 | 85 | 207 | 19 | 125/160 | 19 | 85 | 140 | 207 | 15 | 55 | 8 |
| 80 | 84 | 106 | 224 | 19 | 146/190 | 19 | 85 | 140 | 224 | 10 | 55 | 8 |
| 100 | 103 | 116 | 250 | 21 | 178/216 | 19 | 85 | 140 | 250 | 10 | 55 | 9 |
| 100 | 108 | 130 | 250 | 21 | 178/216 | 19 | 85 | 150 | 250 | 10 | 55 | 9 |
| 125 | 128 | 146 | 286 | 21 | 210/242 | 22 | 85 | 150 | 276 | 10 | 55 | 13 |
| 125 | 134 | 155 | 286 | 21 | 210/242 | 22 | 85 | 150 | 276 | 10 | 55 | 13 |
| 150/175/200 | 153 | 175 | 340 | 21 | 237/298 | 23 | 85 | 150 | 304 | 10 | 55 | 15 |
| 150/175/200 | 165 | 185 | 340 | 21 | 237/298 | 23 | 85 | 150 | 304 | 10 | 55 | 16 |
| 200 | 184 | 207 | 342 | 21 | 290/301 | 23 | 100 | 170 | 330 | 10 | 70 | 19 |
| 200 | 208 | 225 | 348 | 21 | 295/301 | 23 | 100 | 170 | 348 | 10 | 70 | 19 |
| 200 | 218 | 236 | 348 | 23 | 295 | 23 | 100 | 170 | 359 | 15 | 70 | 21 |
| 200 | 222 | 250 | 370 | 23 | 295 | 23 | 100 | 170 | 373 | 28 | 70 | 21 |
| 250 | 246 | 270 | 406 | 22 | 350/364 | 27 | 110 | 170 | 394 | 10 | 80 | 26 |
| 250 | 264 | 284 | 406 | 22 | 350/364 | 27 | 100 | 170 | 407 | 10 | 70 | 26 |
| 250 | 282 | 306 | 435 | 22 | 355 | 26 | 111 | 190 | 433 | 28 | 80 | 27 |
| 300 | 305 | 326 | 482 | 24 | 400/434 | 27 | 100 | 170 | 459 | 10 | 70 | 32 |
| 300 | 345 | 335 | 482 | 24 | 400/434 | 27 | 110 | 170 | 463 | 10 | 80 | 32 |
| 300 | 334 | 355 | 482 | 24 | 405/440 | 27 | 185 | 260 | 483 | 83 | 155 | 39 |
| 300 | 360 | 386 | 498 | 24 | 404/440 | 27 | 185 | 260 | 510 | 83 | 155 | 41 |
| 350 | 360 | 386 | 533 | 24 | 460/479 | 27 | 100 | 190 | 510 | 10 | 70 | 43 |
| 400 | 386 | 410 | 596 | 24 | 515/542 | 30 | 100 | 190 | 559 | 10 | 80 | 58 |
| 400 | 408 | 435 | 596 | 24 | 515/542 | 30 | 100 | 190 | 559 | 10 | 70 | 60 |
| 400 | 425 | 458 | 596 | 24 | 515/542 | 30 | 110 | 190 | 584 | 10 | 80 | 62 |
| 400 | 465 | 500 | 630 | 24 | 525/570 | 30 | 185 | 300 | 628 | 83 | 155 | 71 |

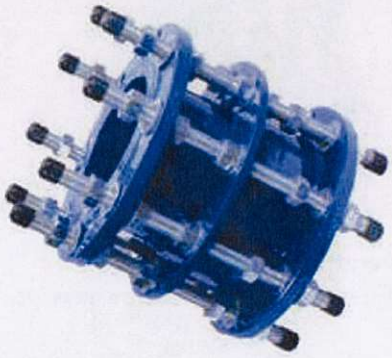

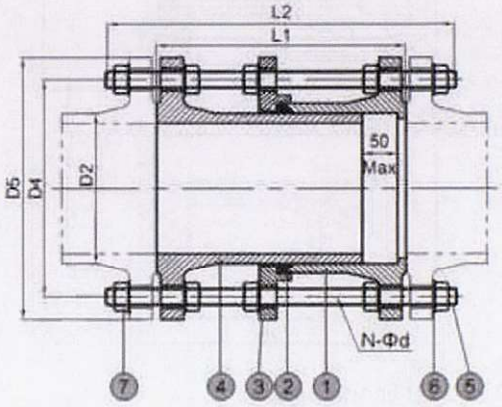


● Material Specification:

| Item No. | Part Name | Material | Specification |
|---|---|---|---|
| 1 | Outer Flange | Ductile Iron | GJS500-7 |
| 2 | Sealing Ring | Rubber | EPDM |
| 3 | Middle Flange | Ductile Iron | GJS500-7 |
| 4 | Inner Flange | Ductile Iron | GJS500-7 |
| 5 | Stud | Zinc Plated Steel | ISO898-1:1999 |
| 6 | Washer | Zinc Plated Steel | |
| 7 | Nut | Zinc Plated Steel | ISO898-2:1999 |

Features

- Ductile Iron GGG500-7 material with FBE coated.
- Equipped with galvanized steel bolts,nuts.
- EPDM or NBR rubber seals.
- Range of diameters from 80mm to 2000mm.

● Dismantling joint PN10 and PN16

| DN | Pipe OD | Length | | PN10 Flange Drilling | | | Mass (kg) | PN16 Flange Drilling | | | Mass (kg) |
|---|---|---|---|---|---|---|---|---|---|---|---|
| | D2 | L1 | L2 | D4 | D5 | N-Ød | | D4 | D5 | N-Ød | |
| 80 | 98 | 200 | 310 | 160 | 200 | 8-19 | 17 | 160 | 200 | 8-19 | 18 |
| 100 | 118 | 200 | 310 | 180 | 220 | 8-19 | 21 | 180 | 220 | 8-19 | 21 |
| 150 | 170 | 200 | 340 | 240 | 285 | 8-23 | 35 | 240 | 285 | 8-23 | 35 |
| 200 | 222 | 220 | 340 | 295 | 340 | 8-23 | 49 | 295 | 340 | 12-23 | 52 |
| 250 | 274 | 230 | 370 | 350 | 400 | 12-23 | 54 | 355 | 400 | 12-28 | 76 |
| 300 | 326 | 250 | 410 | 400 | 455 | 12-23 | 73 | 410 | 455 | 12-28 | 93 |
| 350 | 378 | 260 | 410 | 460 | 505 | 16-23 | 96 | 470 | 520 | 16-28 | 129 |
| 400 | 429 | 270 | 430 | 515 | 565 | 16-28 | 124 | 525 | 580 | 16-31 | 164 |
| 450 | 480 | 270 | 430 | 565 | 615 | 20-28 | 141 | 585 | 640 | 20-31 | 190 |
| 500 | 532 | 280 | 440 | 620 | 670 | 20-28 | 160 | 650 | 715 | 20-34 | 243 |
| 600 | 635 | 300 | 480 | 725 | 780 | 20-31 | 207 | 770 | 840 | 20-37 | 332 |
| 700 | 738 | 300 | 480 | 840 | 892 | 24-31 | 250 | 840 | 910 | 24-37 | 368 |
| 800 | 842 | 320 | 520 | 950 | 1015 | 24-34 | 354 | 950 | 1025 | 24-40 | 480 |
| 900 | 945 | 320 | 520 | 1050 | 1115 | 28-34 | 407 | 1050 | 1125 | 28-40 | 548 |
| 1000 | 1048 | 340 | 560 | 1160 | 1230 | 28-37 | 486 | 1170 | 1255 | 28-43 | 719 |
| 1100 | 1152 | 340 | 560 | 1270 | 1340 | 32-37 | / | 1270 | 1355 | 32-43 | / |
| 1200 | 1255 | 360 | 600 | 1380 | 1455 | 32-40 | 748 | 1390 | 1485 | 32-49 | 1110 |
| 1400 | 1462 | 380 | 630 | 1590 | 1675 | 36-43 | 1037 | 1590 | 1685 | 36-49 | 1350 |
| 1500 | 1565 | 400 | 665 | 1700 | 1785 | 36-43 | / | 1710 | 1820 | 36-56 | 1800 |
| 1600 | 1668 | 400 | 665 | 1820 | 1915 | 40-49 | / | 1820 | 1930 | 40-56 | 2010 |
| 1800 | 1875 | 420 | 700 | 2020 | 2115 | 44-49 | / | 2020 | 2130 | 44-56 | 2136 |
| 2000 | 2082 | 440 | 730 | 2230 | 2325 | 48-49 | / | 2230 | 2345 | 48-62 | 3285 |

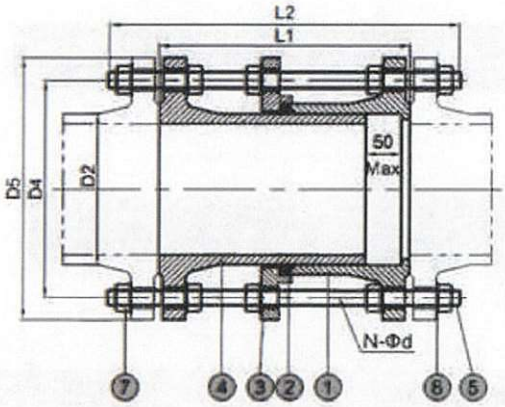


● Material Specification:

| Item No. | Part Name | Material | Specification |
|---|---|---|---|
| 1 | Outer Flange | Ductile Iron | GJS500-7 |
| 2 | Sealing Ring | Rubber | EPDM |
| 3 | Middle Flange | Ductile Iron | GJS500-7 |
| 4 | Inner Flange | Ductile Iron | GJS500-7 |
| 5 | Stud | Zinc Plated Steel | ISO898-1:1999 |
| 6 | Washer | Zinc Plated Steel | |
| 7 | Nut | Zinc Plated Steel | ISO898-2:1999 |

Features

- Ductile Iron GGG50 material with FBE coated.
- Equipped with galvanized steel bolts,nuts.
- EPDM or NBR rubber seals.
- Range of diameters from 80mm to 2000mm.

● Dismantling joint PN25

| DN | Pipe OD | Length | | PN25 Flange Drilling | | | Mass (kg) |
|---|---|---|---|---|---|---|---|
| | D2 | L1 | L2 | D4 | D5 | N-Ød | |
| 80 | 98 | 210 | 330 | 160 | 200 | 8-19 | 22 |
| 100 | 118 | 220 | 340 | 190 | 235 | 8-23 | 32 |
| 150 | 170 | 230 | 370 | 250 | 300 | 8-28 | 52 |
| 200 | 222 | 230 | 370 | 310 | 360 | 12-28 | 76 |
| 250 | 274 | 250 | 410 | 370 | 425 | 12-31 | 104 |
| 300 | 326 | 250 | 410 | 430 | 485 | 16-31 | 134 |
| 350 | 378 | 270 | 440 | 490 | 555 | 16-34 | 196 |
| 400 | 429 | 280 | 480 | 550 | 620 | 16-37 | 248 |
| 450 | 480 | 280 | 480 | 600 | 670 | 20-37 | 281 |
| 500 | 532 | 300 | 480 | 660 | 730 | 20-37 | 327 |
| 600 | 635 | 300 | 520 | 770 | 845 | 20-40 | 436 |
| 700 | 738 | 320 | 560 | 875 | 960 | 24-43 | 573 |
| 800 | 842 | 320 | 600 | 990 | 1085 | 24-49 | 800 |
| 900 | 945 | 340 | 600 | 1090 | 1185 | 28-49 | 888 |
| 1000 | 1048 | 360 | 650 | 1210 | 1320 | 28-56 | 1272 |
| 1200 | 1255 | 360 | 720 | 1420 | 1530 | 32-56 | 1870 |
| 1400 | 1462 | 380 | 770 | 1640 | 1755 | 36-62 | / |
| 1600 | 1668 | 420 | 815 | 1860 | 1975 | 40-62 | / |
| 1800 | 1895 | 440 | 865 | 2070 | 2195 | 44-70 | / |
| 2000 | 2082 | 460 | 930 | 2300 | 2425 | 48-70 | / |

● Dismantling joint PN40

| DN | Pipe OD | Length | | PN40 Flange Drilling | | |
|---|---|---|---|---|---|---|
| | D2 | L1 | L2 | D4 | D5 | N-Ød |
| 80 | 98 | 210 | 330 | 160 | 200 | 8-19 |
| 100 | 118 | 220 | 340 | 190 | 235 | 8-23 |
| 150 | 170 | 230 | 370 | 250 | 300 | 8-28 |
| 200 | 222 | 230 | 410 | 320 | 375 | 12-31 |
| 250 | 274 | 250 | 440 | 385 | 450 | 12-34 |
| 300 | 326 | 250 | 440 | 450 | 515 | 16-34 |
| 350 | 378 | 270 | 480 | 510 | 580 | 16-37 |
| 400 | 429 | 280 | 520 | 585 | 660 | 16-40 |
| 500 | 532 | 300 | 560 | 670 | 755 | 20-43 |
| 600 | 635 | 300 | 600 | 795 | 890 | 20-49 |

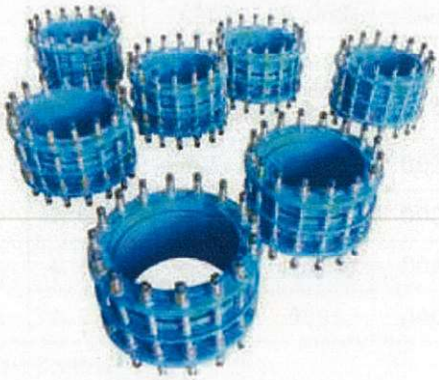

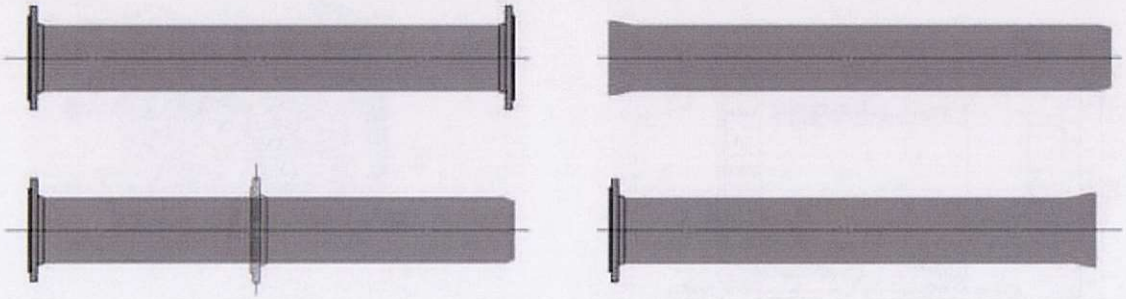

● Straight Pipe、Cast-on Flange

| Nominal Dia. | Weight of Pipe Barrel | | Cast-on Flange | | | | | | Socket Weight | K9 pipe |
|---|---|---|---|---|---|---|---|---|---|---|
| DN mm | K9 kg/m | K12 kg/m | PN10 | | PN16 | | PN25 | | T-type Kg/socket | Kg/6m |
| | | | Kg/pc | Kg/2pcs | Kg/pc | Kg/2pcs | Kg/pc | Kg/2pcs | | |
| 80 | 12.2 | 16 | 2.9 | 5.8 | 2.9 | 5.8 | 2.9 | 5.8 | 3.4 | 77 |
| 100 | 15.1 | 17.7 | 3.3 | 6.6 | 3.3 | 6.6 | 3.8 | 7.6 | 4.3 | 95 |
| 125 | 18.3 | 22.7 | 4.9 | 9.8 | 4.9 | 9.8 | 5.9 | 11.8 | 5.7 | 116 |
| 150 | 22.8 | 28 | 4.9 | 9.8 | 4.9 | 9.8 | 5.9 | 11.8 | 7.1 | 144 |
| 200 | 30.6 | 39.7 | 6.8 | 13.6 | 6.8 | 13.6 | 8.7 | 17.4 | 10.3 | 194 |
| 250 | 40.2 | 53 | 9.6 | 19.2 | 9.2 | 18.4 | 13.1 | 26.2 | 14.2 | 255 |
| 300 | 50.8 | 67.3 | 12.8 | 25.6 | 12.4 | 24.8 | 18 | 36 | 18.6 | 323 |
| 350 | 63.2 | 83.1 | 14.1 | 28.2 | 17.2 | 34.4 | 26 | 52 | 23.7 | 403 |
| 400 | 75.5 | 100 | 16.3 | 32.6 | 21.9 | 43.8 | 33 | 66 | 29.3 | 482 |
| 450 | 89.3 | 118 | 18.1 | 36.2 | 26.7 | 53.4 | 43 | 86 | 38.3 | 575 |
| 500 | 104.3 | 138 | 20.8 | 41.6 | 37.0 | 74.0 | 49 | 98 | 42.8 | 669 |
| 600 | 137.3 | 182 | 30.8 | 61.6 | 57.3 | 114.6 | 72 | 144 | 59.3 | 882 |
| 700 | 173.9 | 231 | 40.5 | 81.0 | 55.6 | 111.2 | 90.3 | 180.6 | 79.1 | 1123 |
| 800 | 215.2 | 286 | 54.8 | 109.6 | 74.0 | 148.0 | 123.2 | 246.4 | 102.6 | 1394 |
| 900 | 260.2 | 345 | 64.3 | 128.6 | 88.2 | 176.4 | 148.6 | 297.2 | 129.9 | 1691 |
| 1000 | 309.3 | 411 | 81.4 | 162.8 | 122.9 | 245.8 | 200.7 | 401.4 | 161.3 | 2017 |
| 1200 | 420.1 | 558 | 120.9 | 241.8 | 185.2 | 370.4 | 284.7 | 569.4 | 237.7 | 2758 |
| 1400 | 547.2 | 726 | 147.8 | 295.6 | 215.9 | 431.8 | 368.1 | 736.2 | 385.8 | 3669 |
| 1600 | 690.3 | 916 | 206.4 | 412.8 | 308.4 | 616.8 | | | | / |
| 1800 | 850.1 | 1129 | 236.3 | 472.6 | 362.2 | 724.2 | | | | / |
| 2000 | 1026 | 1363 | 279.4 | 558.8 | 432.2 | 864.4 | | | | / |
| Note:Screwed-on flange pipe also available. | | | | | | | | | | |

●Weld-on Flange(short -neck)
●Screw-on Flange

| DN | PN10 | | PN16 | |
|---|---|---|---|---|
| | Kg/pc | Kg/2pcs | Kg/pc | Kg/2pcs |
| 80 | 3.5 | 7 | 3.5 | 7 |
| 100 | 4 | 8 | 4 | 8 |
| 125 | 5 | 10 | 5 | 10 |
| 150 | 6.1 | 12.2 | 6.1 | 12.2 |
| 200 | 8.5 | 17 | 8.3 | 16.6 |
| 250 | 11.8 | 23.6 | 11.4 | 22.8 |
| 300 | 15.6 | 31.2 | 15.2 | 30.4 |
| 350 | 17.6 | 35.2 | 20.7 | 41.4 |
| 400 | 20.5 | 41 | 26.1 | 52.2 |
| 450 | 24.1 | 48.2 | 32.7 | 65.4 |
| 500 | 27.6 | 55.2 | 42.8 | 85.6 |
| 600 | 38.4 | 76.8 | 64.9 | 129.8 |
| 700 | 50.2 | 100.4 | 65.3 | 130.6 |
| 800 | 66.7 | 133.4 | 85.9 | 171.8 |
| 900 | 78.7 | 157.4 | 102.6 | 205.2 |
| 1000 | 98.6 | 197.2 | 140.1 | 280.2 |
| 1200 | 114.2 | 228.4 | 208.5 | 417 |
| 1400 | 178.2 | 356.4 | 246.3 | 492.6 |
| 1600 | 244.7 | 489.4 | 346.7 | 693.4 |
| 1800 | 283.5 | 567 | 409.4 | 818.8 |
| 2000 | 336.4 | 672.8 | 489.2 | 978.4 |

●Weld-on Flange(long -neck)

| DN | PN10 | | PN16 | | PN25 | |
|---|---|---|---|---|---|---|
| | Kg/pc | Kg/2pcs | Kg/pc | Kg/2pcs | Kg/pc | Kg/2pcs |
| DN80 | 4 | 8 | 4 | 8 | 4 | 8 |
| DN100 | 5 | 10 | 5 | 10 | 5.5 | 11 |
| DN150 | 8 | 16 | 8 | 16 | 9 | 18 |
| DN200 | 11 | 22 | 11 | 22 | 13 | 26 |
| DN250 | 15 | 30 | 15 | 30 | 19 | 38 |
| DN300 | 19 | 38 | 19 | 38 | 24 | 48 |
| DN350 | 26 | 52 | 29 | 58 | 38 | 76 |
| DN400 | 31 | 62 | 35 | 70 | 47 | 94 |
| DN450 | 36 | 72 | 43 | 86 | 59 | 118 |
| DN500 | 45 | 90 | 60 | 120 | 72 | 144 |
| DN600 | 59 | 118 | 85 | 170 | 100 | 200 |
| DN700 | 95 | 190 | 108 | 216 | 143 | 286 |
| DN800 | 100 | 200 | 117 | 234 | 167 | 234 |
| DN900 | 125 | 250 | 143 | 286 | 204 | 408 |
| DN1000 | 145 | 290 | 180 | 360 | 258 | 516 |
| DN1200 | 180 | 360 | 235 | 470 | 335 | 670 |
| DN1400 | | | 290 | 580 | | |

● Double flange pipe K12(cast-on)

| DN | L | Mass (kg) PN16 |
|---|---|---|
| 80 | 200 | 9 |
| | 250 | 10 |
| | 300 | 11 |
| | 350 | 12 |
| | 400 | 12.5 |
| | 450 | 13 |
| | 500 | 14 |
| | 600 | 15.5 |
| | 700 | 17 |
| | 800 | 19 |
| 100 | 200 | 10.5 |
| | 250 | 11 |
| | 300 | 12 |
| | 350 | 13 |
| | 400 | 14 |
| | 450 | 15 |
| | 500 | 15.5 |
| | 600 | 18 |
| | 700 | 19 |
| | 800 | 21 |
| | 900 | 23 |
| | 1000 | 25 |
| 150 | 200 | 16 |
| | 250 | 17 |
| | 300 | 19 |
| | 350 | 20 |
| | 400 | 21 |
| | 450 | 23 |
| | 500 | 24 |
| | 600 | 27 |
| | 700 | 30 |
| | 800 | 33 |
| | 900 | 35 |
| | 1000 | 38 |
| 200 | 200 | 22 |
| | 250 | 24 |
| | 300 | 26 |
| | 350 | 28 |
| | 400 | 30 |
| | 450 | 32 |
| | 500 | 34 |
| | 600 | 38 |
| | 700 | 42 |
| | 800 | 46 |
| | 900 | 50 |
| | 1000 | 54 |

| DN | L | Mass (kg) PN16 |
|---|---|---|
| 250 | 200 | 29 |
| | 250 | 32 |
| | 300 | 35 |
| | 350 | 37 |
| | 400 | 40 |
| | 450 | 43 |
| | 500 | 45 |
| | 600 | 51 |
| | 700 | 56 |
| | 800 | 61 |
| | 900 | 67 |
| | 1000 | 72 |
| 300 | 200 | 39 |
| | 250 | 42 |
| | 300 | 45 |
| | 350 | 49 |
| | 400 | 52 |
| | 450 | 56 |
| | 500 | 59 |
| | 600 | 66 |
| | 700 | 72 |
| | 800 | 79 |
| | 900 | 86 |
| | 1000 | 93 |
| | 1200 | 106 |
| 350 | 200 | 51 |
| | 250 | 56 |
| | 300 | 60 |
| | 350 | 64 |
| | 400 | 68 |
| | 500 | 76 |
| | 600 | 85 |
| | 700 | 93 |
| | 800 | 101 |
| | 900 | 110 |
| | 1000 | 118 |
| | 1200 | 135 |
| 400 | 300 | 74 |
| | 400 | 84 |
| | 500 | 94 |
| | 600 | 104 |
| | 700 | 114 |
| | 800 | 124 |
| | 900 | 134 |
| | 1000 | 144 |
| | 1200 | 164 |

| DN | L | Mass (kg) PN16 |
|---|---|---|
| 450 | 300 | 89 |
| | 400 | 101 |
| | 500 | 113 |
| | 600 | 125 |
| | 700 | 136 |
| | 800 | 148 |
| | 900 | 160 |
| | 1000 | 172 |
| | 1200 | 195 |
| | 1300 | 207 |
| 500 | 300 | 116 |
| | 400 | 130 |
| | 500 | 143 |
| | 600 | 157 |
| | 700 | 171 |
| | 800 | 185 |
| | 900 | 199 |
| | 1000 | 212 |
| | 1500 | 281 |
| | 2000 | 350 |
| 600 | 300 | 170 |
| | 400 | 188 |
| | 500 | 206 |
| | 600 | 224 |
| | 700 | 242 |
| | 800 | 261 |
| | 900 | 279 |
| | 1000 | 297 |
| | 1500 | 388 |
| | 2000 | 479 |
| 700 | 300 | 181 |
| | 400 | 204 |
| | 500 | 227 |
| | 600 | 250 |
| | 700 | 273 |
| | 800 | 296 |
| | 900 | 320 |
| | 1000 | 343 |
| | 1500 | 458 |
| | 2000 | 574 |
| 800 | 300 | 234 |
| | 400 | 263 |
| | 500 | 291 |
| | 600 | 320 |
| | 700 | 349 |
| | 800 | 377 |

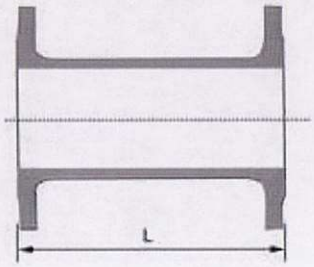


| DN | L | Mass (kg) PN16 |
|---|---|---|
| 800 | 900 | 406 |
| | 1000 | 434 |
| | 1500 | 577 |
| | 2000 | 720 |
| 900 | 300 | 280 |
| | 400 | 315 |
| | 500 | 349 |
| | 600 | 384 |
| | 700 | 418 |
| | 800 | 453 |
| | 900 | 487 |
| | 1000 | 522 |
| | 1500 | 694 |
| | 2000 | 867 |
| 1000 | 300 | 370 |
| | 400 | 411 |
| | 500 | 452 |
| | 600 | 493 |
| | 700 | 534 |
| | 800 | 575 |
| | 900 | 616 |
| | 1000 | 657 |
| | 1500 | 863 |
| | 2000 | 1068 |
| 1100 | 1000 | 764 |
| | 1500 | 1005 |
| | 2000 | 1246 |
| 1200 | 1000 | 929 |
| | 1500 | 1208 |
| | 2000 | 1487 |
| 1400 | 1000 | 1158 |
| | 1500 | 1521 |
| | 2000 | 1884 |
| 1600 | 1000 | 1533 |
| | 1500 | 1991 |
| | 2000 | 2449 |

● Double flange pipe (weld-on)

| DN | L | Mass(kg) | | |
|---|---|---|---|---|
| | | PN10 | PN16 | PN25 |
| 80 | 1000 | 24 | 24 | 24 |
| | 2000 | 40 | 40 | 40 |
| | 3000 | 45 | 45 | 45 |
| | 4000 | 57 | 57 | 57 |
| | 5000 | 69 | 69 | 69 |
| | 5500 | 76 | 76 | 76 |
| | 5700 | 78 | 78 | 78 |
| 100 | 2000 | 46 | 46 | 47 |
| | 3000 | 56 | 56 | 57 |
| | 4000 | 71 | 71 | 72 |
| | 5000 | 86 | 86 | 87 |
| | 5500 | 94 | 94 | 95 |
| | 5700 | 97 | 97 | 98 |
| 150 | 2000 | 72 | 72 | 74 |
| | 3000 | 85 | 85 | 87 |
| | 4000 | 108 | 108 | 110 |
| | 5000 | 130 | 130 | 132 |
| | 5500 | 142 | 142 | 144 |
| | 5700 | 146 | 146 | 148 |
| 200 | 2000 | 102 | 102 | 106 |
| | 3000 | 114 | 114 | 118 |
| | 4000 | 145 | 145 | 149 |
| | 5000 | 175 | 175 | 179 |
| | 5500 | 191 | 191 | 195 |
| | 5700 | 197 | 197 | 201 |
| 250 | 2000 | 137 | 137 | 145 |
| | 3000 | 151 | 151 | 159 |
| | 4000 | 191 | 191 | 199 |
| | 5000 | 231 | 231 | 239 |
| | 5500 | 252 | 252 | 260 |

| DN | L | Mass(kg) | | |
|---|---|---|---|---|
| | | PN10 | PN16 | PN25 |
| 250 | 5700 | 260 | 260 | 268 |
| 300 | 2000 | 173 | 173 | 183 |
| | 3000 | 191 | 191 | 201 |
| | 4000 | 242 | 242 | 252 |
| | 5000 | 292 | 192 | 302 |
| | 5500 | 318 | 318 | 328 |
| | 5700 | 328 | 328 | 338 |
| 350 | 2000 | 219 | 225 | 243 |
| | 3000 | 242 | 248 | 266 |
| | 4000 | 305 | 311 | 329 |
| | 5000 | 368 | 374 | 392 |
| | 5500 | 400 | 406 | 424 |
| | 5700 | 413 | 419 | 437 |
| 400 | 2000 | 262 | 270 | 294 |
| | 3000 | 289 | 297 | 321 |
| | 4000 | 364 | 372 | 396 |
| | 5000 | 440 | 448 | 472 |
| | 5500 | 478 | 486 | 510 |
| | 5700 | 493 | 501 | 525 |
| 450 | 3000 | 340 | 354 | 386 |
| | 4000 | 430 | 444 | 476 |
| | 5000 | 519 | 533 | 565 |
| | 5500 | 564 | 578 | 610 |
| | 5700 | 582 | 596 | 628 |
| 500 | 3000 | 403 | 433 | 457 |
| | 4000 | 508 | 538 | 562 |
| | 5000 | 612 | 642 | 666 |
| | 5500 | 664 | 694 | 718 |
| | 5700 | 685 | 715 | 739 |
| 600 | 3000 | 530 | 582 | 612 |

| DN | L | Mass(kg) | | |
|---|---|---|---|---|
| | | PN10 | PN16 | PN25 |
| 600 | 4000 | 668 | 720 | 750 |
| | 5000 | 805 | 857 | 887 |
| | 5500 | 874 | 926 | 956 |
| | 5700 | 901 | 953 | 983 |
| 700 | 3000 | 712 | 738 | 808 |
| | 4000 | 886 | 912 | 982 |
| | 5000 | 1060 | 1086 | 1156 |
| | 5500 | 1147 | 1173 | 1243 |
| | 5700 | 1182 | 1208 | 1278 |
| 800 | 3000 | 846 | 880 | 980 |
| | 4000 | 1061 | 1095 | 1195 |
| | 5000 | 1276 | 1310 | 1410 |
| | 5500 | 1384 | 1418 | 1518 |
| | 5700 | 1427 | 1461 | 1561 |
| 900 | 3000 | 1031 | 1067 | 1189 |
| | 4000 | 1291 | 1327 | 1449 |
| | 5000 | 1551 | 1587 | 1709 |
| | 5500 | 1682 | 1718 | 1840 |
| | 5700 | 1734 | 1770 | 1892 |
| 1000 | 3000 | 1218 | 1288 | 1444 |
| | 4000 | 1528 | 1598 | 1754 |
| | 5000 | 1837 | 1907 | 2063 |
| | 5500 | 1992 | 2062 | 2218 |
| | 5700 | 2054 | 2124 | 2280 |
| 1200 | 3000 | 1621 | 1731 | 1931 |
| | 4000 | 2041 | 2151 | 2351 |
| | 5000 | 2461 | 2571 | 2771 |
| | 5500 | 2671 | 2781 | 2981 |
| | 5700 | 2755 | 2865 | 3065 |

IISCO

الشركة الدولية للحلول المتكاملة

INTERNATIONAL INTEGRATED SOLUTIONS Co

www.iisco.com.sa info@iisco.com.sa KSA-Riyadh- P.O.Box11321 Code 3159